GP-4 SINGLE STEP AND CONTROL PANEL

727

Technical Training

SINGER
Link Division

GP-4 SINGLE STEP AND
CONTROL PANEL

727

[illegible]	B688000	SHEET NO.	TITLE
[illegible]	687502	2,3	AUX ADDRESS COUNTER CONTROL
[illegible]	687274	4,5	AUXILIARY ADDRESS COUNTER
[illegible]	687274	6,7	AUXILIARY ADDRESS COUNTER
[illegible]	687520	8	SINGLE STEP COMPARISON GATE
5	687354	9,10	INSTRUCTION REPLACE A ADDRESS BUFFER REGISTER
6	687354	11,12	INSTRUCTION REPLACE A ADDRESS BUFFER REGISTER
7	688676	13,14,15	INSTRUCTION REPLACE B ADDRESS BUFFER REGISTER
8	688676	16,17,18	INSTRUCTION REPLACE B ADDRESS BUFFER REGISTER
9	———		
10	———		
11	687506	19,20	COINCIDENCE GATE ENABLE & TIMING
12	———		
13	687544	21,22	KEYBOARD DATA CONTROL
14	687556	23,24	KEYBOARD FORMAT DECODING & ENCODING
15	687542	25	KEYBOARD DISPLAY LOADER & BUFFER
16	687540	26	13-5 INPUT OR GATES
17	687540	27	13-5 INPUT OR GATES
18	———		
A119	687494	28,29	REGISTER DISPLAY MATRIX DECODER
A201	687518	30	TWISTER PAIR LINE RECEIVERS
2	687274	31,32	DRUM ADDRESS COUNTER
3	687274	33,34	DRUM ADDRESS COUNTER
4	687512	35	TWISTED PAIR LINE DRIVERS
5	687518	36	TWISTED PAIR LINE RECEIVERS
6	687526	37	ADDRESS RECOGNITION GATES
7	687526	38	ADDRESS RECOGNITION GATES
8	B688648	39	PULSE SHAPING
9	687504	40,41	SINGLE SHOT PHASE GENERATOR
10	687500	42	SINGLE STEP BY PHASE SHIFT REGISTER
11	687508	43,44	INSTRUCTION TRANSFER CONTROL
12	687510	45	MASTER PULSE GEN & SINGLE STEP CONTROL
13	687514	46	PRIORITY CONTROL LOGIC
14	———		
15	687538	47,48	SWITCH TO MECL LEVEL INTERFACE
16	687538	49,50	SWITCH TO MECL LEVEL INTERFACE
17	687516	51,52	INSTRUCTION SAVE & SKIP LOCK SAVE REGISTER
18	687536	53	LAMP DRIVER
A219	687536	54	LAMP DRIVER

SINGLE STEP ABBREVIATION

ABBREVIATION	DEFINITION
AAC	AUX ADDRESS COUNTER
ADDR	ADDRESS
ADV	ADVANCE
AU	ARITHEMETIC UNIT (GP)
CM	CORE MEMORY
CMAR	CORE MEMORY ADDRESS REGISTER
CONC	COINCIDENCE
CONT	CONTINUOUS
CNTR	COUNTER
DAC	DRUM ADDRESS COUNTER
DM	DISPLAY MODULE (IN KEYBOARD DISPLAY)
DMA	DIRECT MEMORY ACCESS CHANNEL
D/L	MODULE DRUM LOADER
GP	MODULE GENERAL PROCESSOR (AU)
GRD	GROUND
INCR	INCREMENT
IND	INDICATOR (LIGHT)
INST	INSTRUCTION
IRA	INSTRUCTION REPLACE A
IRB	INSTRUCTION REPLACE B
$KB2^N$	KEYBOARD BIT 2^N
LFI	LINEAR FUNCTION INTERPOLATOR
MC	MASTER CLOCK
OP. CONT	OPERATION CONTINUE
PLO	PRIORITY LOCKOUT
PRI	PRIORITY
REPL	REPLACE
RPT	REPEAT
SR	SHIFT REGISTER
S/S	MODULE SINGLE STEP
ϕ	PHASE

SINGLE STEP ABBREVIATION

ABBREVIATION	DEFINITION

NOTES:
1. REFER TO 546711 SHEET 11 FOR DISPLAY CHARACTERS OF MATRIX DECODER, SHEET 28 & 29. R; C; DESIGNATE ROW "i" & COLUMN "j" OF DISPLAY
2. SINGLE STEP BLOCK DIAGRAM IS 621812

REVISIONS			
ZONE	LTR	DESCRIPTION	DATE	APPROVED

B688000E

UNLESS OTHERWISE SPECIFIED DIMENSIONS ARE IN INCHES TOLERANCES ON DIMENSIONS DECIMAL

DR H. Alt... 10-4-67

LINK GROUP, SYSTEMS DIVISION
LINK GENERAL PRECISION, INC
BINGHAMTON, NEW YORK

SINGLE STEP LOGIC FLOW DIAGRAM

SIZE D | CODE IDENT NO. 36378 | DWG NO B688000E

SCALE NONE | SHEET 1 OF 54

B688000 A/F 370-T3

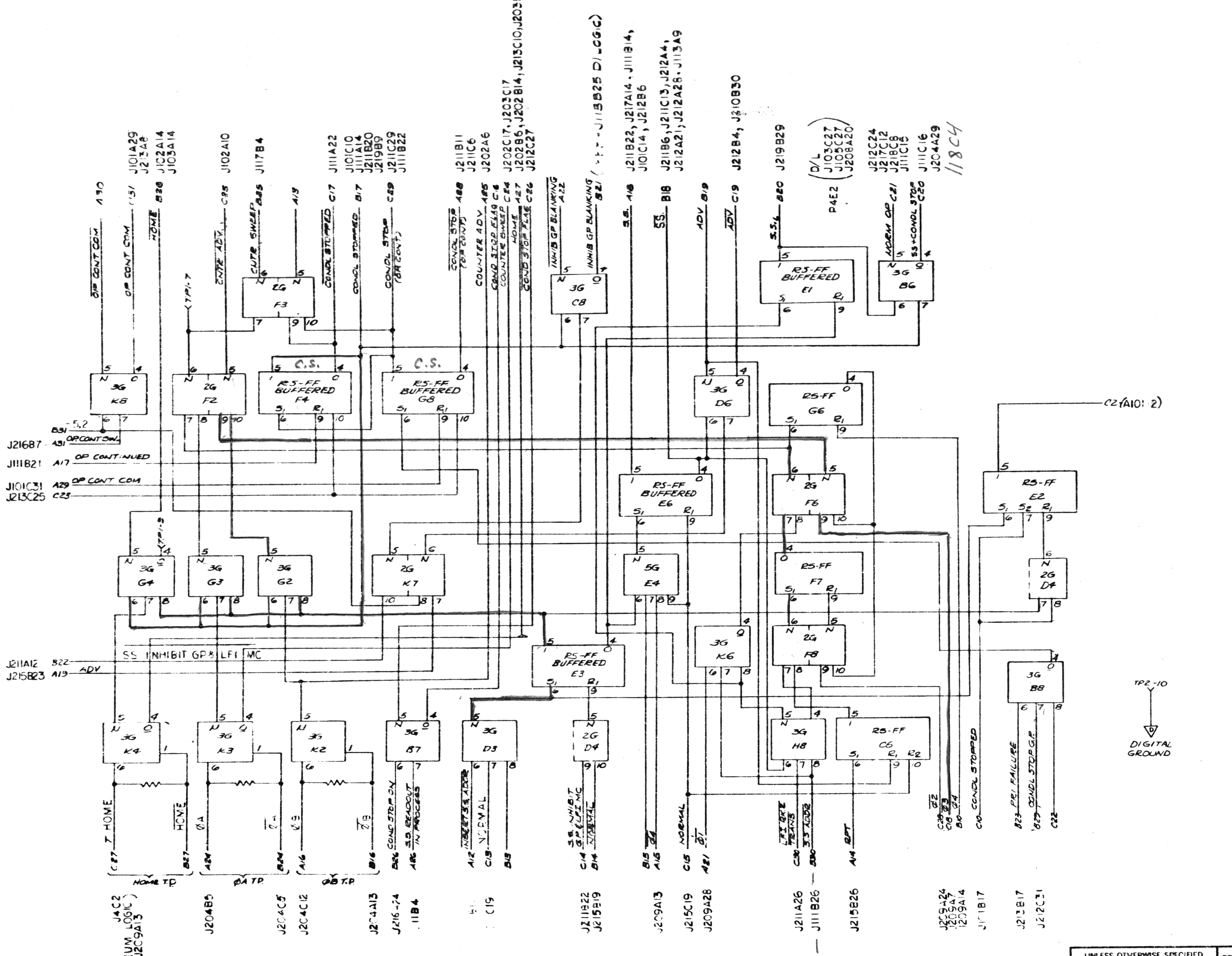

B688000E

A101-1

REVISIONS

ZONE	LTR	DESCRIPTION	DATE	APPROVED

UNLESS OTHERWISE SPECIFIED DIMENSIONS ARE IN INCHES TOLERANCES ON DIMENSIONS
DECIMAL
2 PLACE ± .03 ANGULAR ±
3 PLACE ± .010 FRACTIONAL ±
HOLE DIA TOL PER SHOP STDS
MFR TO LINK STDS

MATL

FINISH

NEXT ASSY	USED ON
667702	AV-570TF

DR
DR CHK
DESGN CHK
MFG CHK
PROJ APPD

LINK GROUP, SYSTEMS DIVISION
LINK GENERAL PRECISION, INC
BINGHAMTON, NEW YORK

LOGIC DIAGRAM AUXILIARY ADDRESS COUNTER CONTROL

SIZE	CODE IDENT NO	DWG NO
D	36378	B688000E

SCALE NONE   SHEET 2

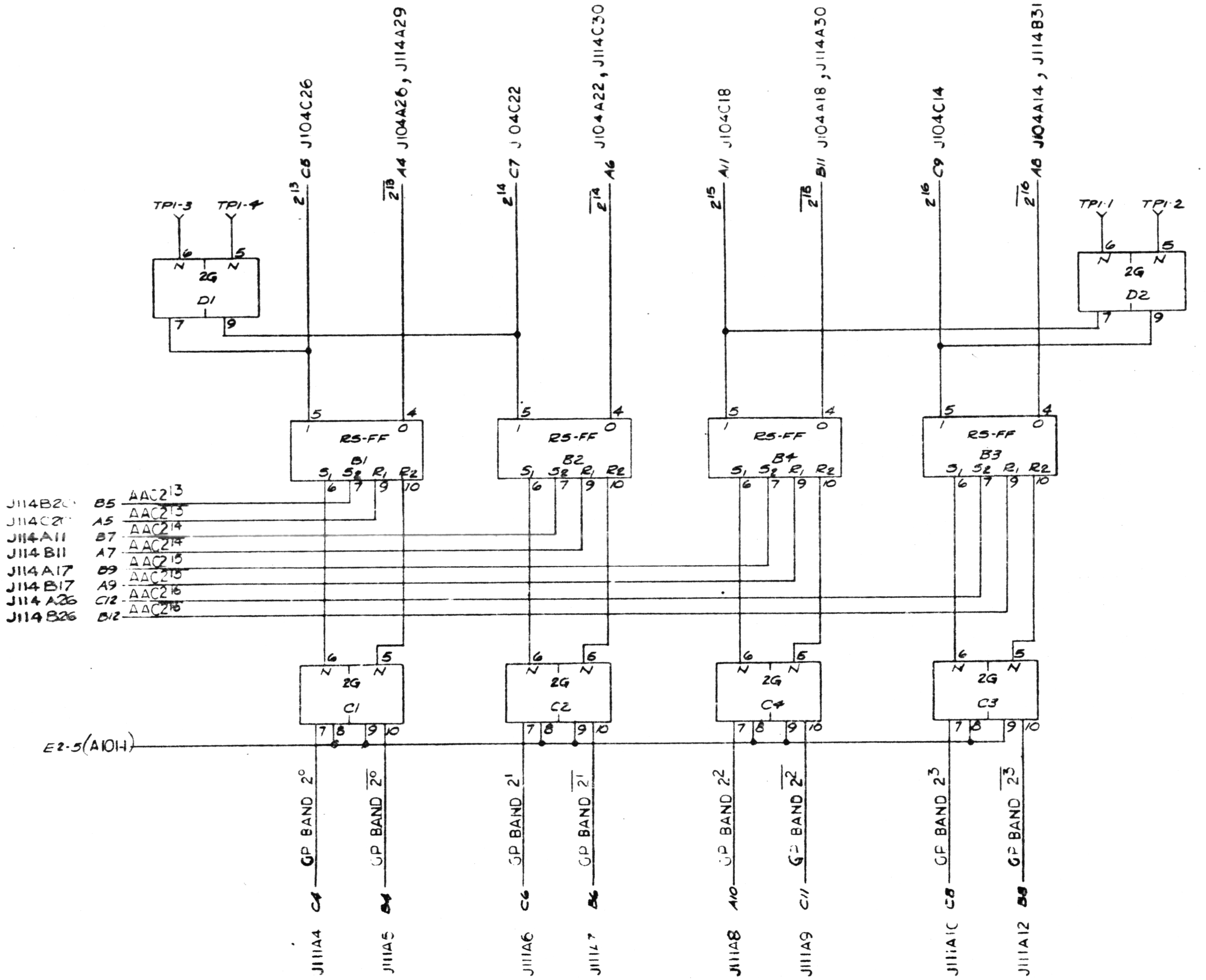

NOTE: GP BAND ^{N} IS BIT 2^{N+13} IN THE AUXILIARY ADDRESS COUNTER

B688000E

A101-2

UNLESS OTHERWISE SPECIFIED DIMENSIONS ARE IN INCHES TOLERANCES ON DIMENSIONS DECIMAL 2 PLACE ± .03 ANGULAR ± 3 PLACE ± .010 FRACTIONAL ± HOLE DIA TOL PER SHOP STDS	DR / DR CHK / DESGN CHK / MFG CHK / PROJ APPD
MFR TO LINK STDS	
MATL	
FINISH	

LINK GROUP, SYSTEMS DIVISION
GENERAL PRECISION, INC
BINGHAMTON, NEW YORK

LOGIC DIAGRAM
AUXILIARY ADDRESS
COUNTER CONTROL

SIZE	CODE IDENT NO	DWG NO
D	36378	B688000E

SCALE NONE — SHEET 3

NEXT ASSY — USED ON

REVISIONS: ZONE | LTR | DESCRIPTION | DATE | APPROVED

ZONE	LTR	REVISIONS DESCRIPTION	DATE	APPROVED

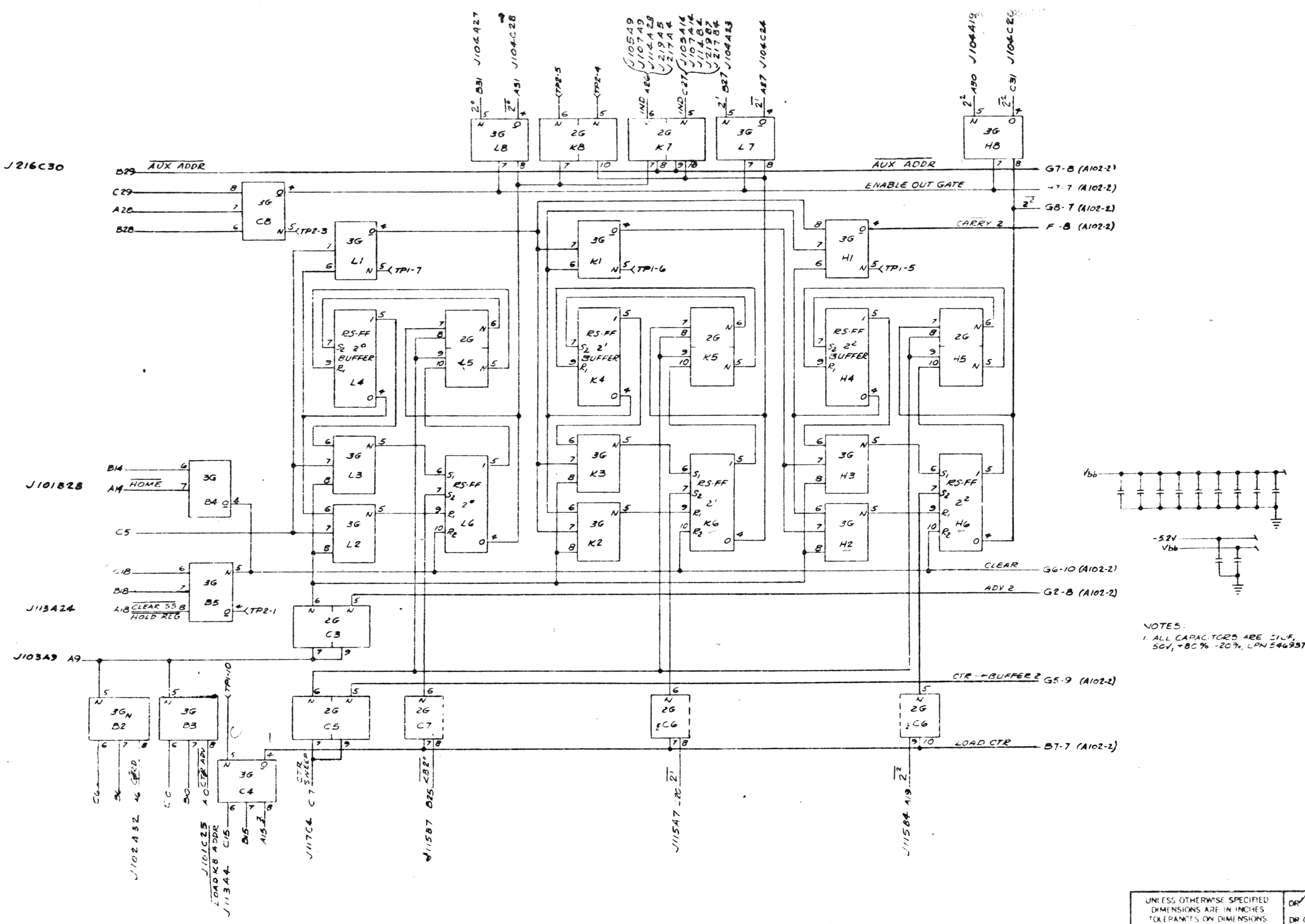

B688000E

A

A102-1

UNLESS OTHERWISE SPECIFIED
DIMENSIONS ARE IN INCHES
TOLERANCES ON DIMENSIONS
DECIMAL
2 PLACE ±.03 ANGULAR
3 PLACE FRACTIONAL
HOLE DIA TOL PER SHOP STD
MTR TO LINK STD

DR 9-30-67
DR CHK 10-19-67
DESIGN CHK 10-23-67
MFG CHK
PROJ APPD 10/23/67

LINK GROUP SYSTEMS DIVISION
LINK GENERAL PRECISION, INC
BINGHAMTON, NEW YORK

AUXILIARY ADDRESS COUNTER

SIZE	CODE IDENT NO	DWG NO
D	36378	B688000E

SCALE | SHEET 4

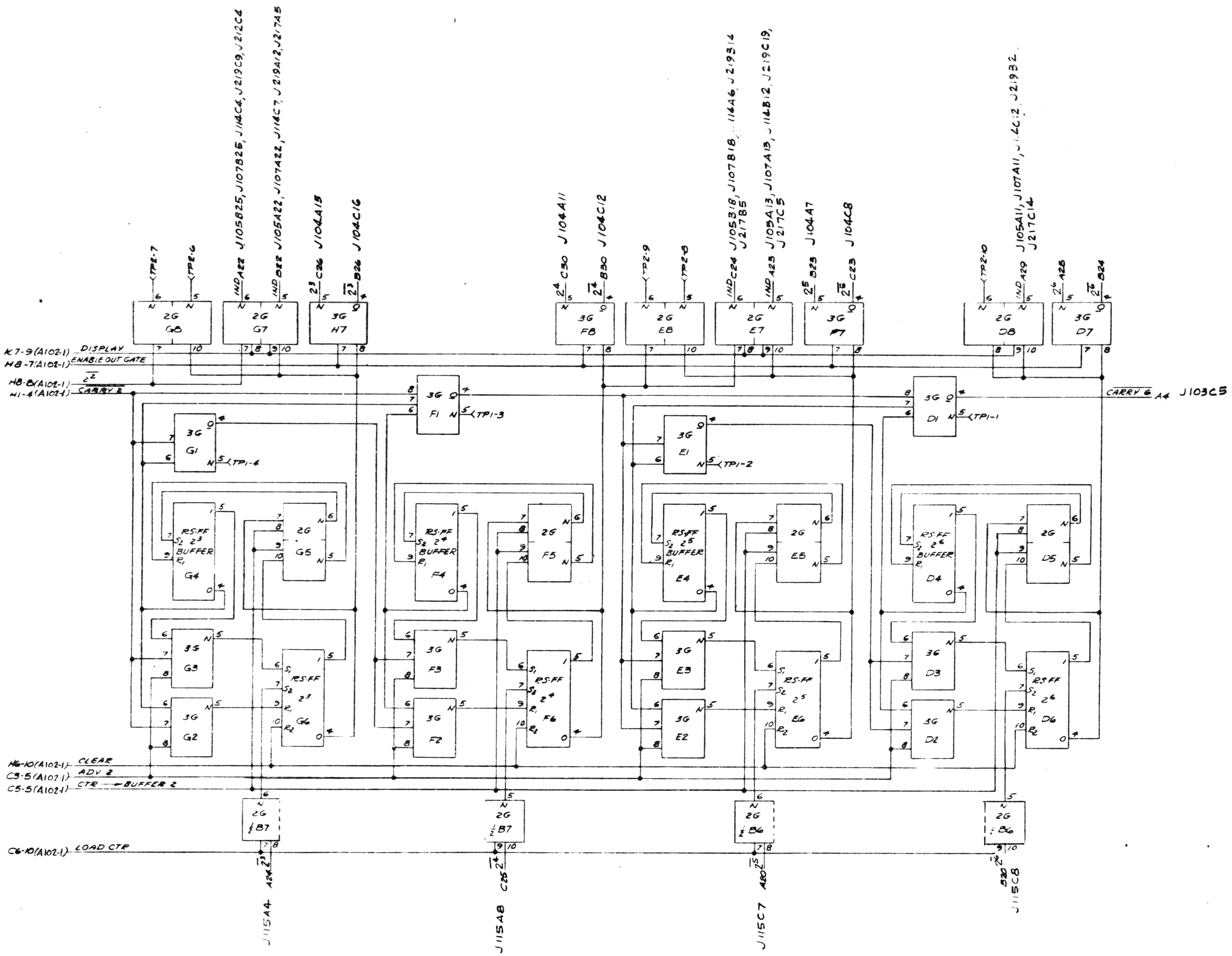

A102-2

UNLESS OTHERWISE SPECIFIED DIMENSIONS ARE IN INCHES TOLERANCES ON DIMENSIONS DECIMAL 2 PLACE ± .03 ANGULAR ± 3 PLACE ± .010 FRACTIONAL ± HOLE DIA. TOL. PER SHOP STDS	DR / DR CHK / DESGN CHK / MFG CHK / PROJ APPD	LINK GROUP, SYSTEMS DIVISION GENERAL PRECISION, INC BINGHAMTON, NEW YORK
MFR. TO LINK STDS		AUXILIARY ADDRESS COUNTER
MATL		SIZE D / CODE IDENT NO 36378 / DWG NO B688000E
FINISH		SCALE NONE / SHEET 5

B688000E

8 7 6 5 4 3 2 1

REVISIONS				
ZONE	LTR	DESCRIPTION	DATE	APPROVED

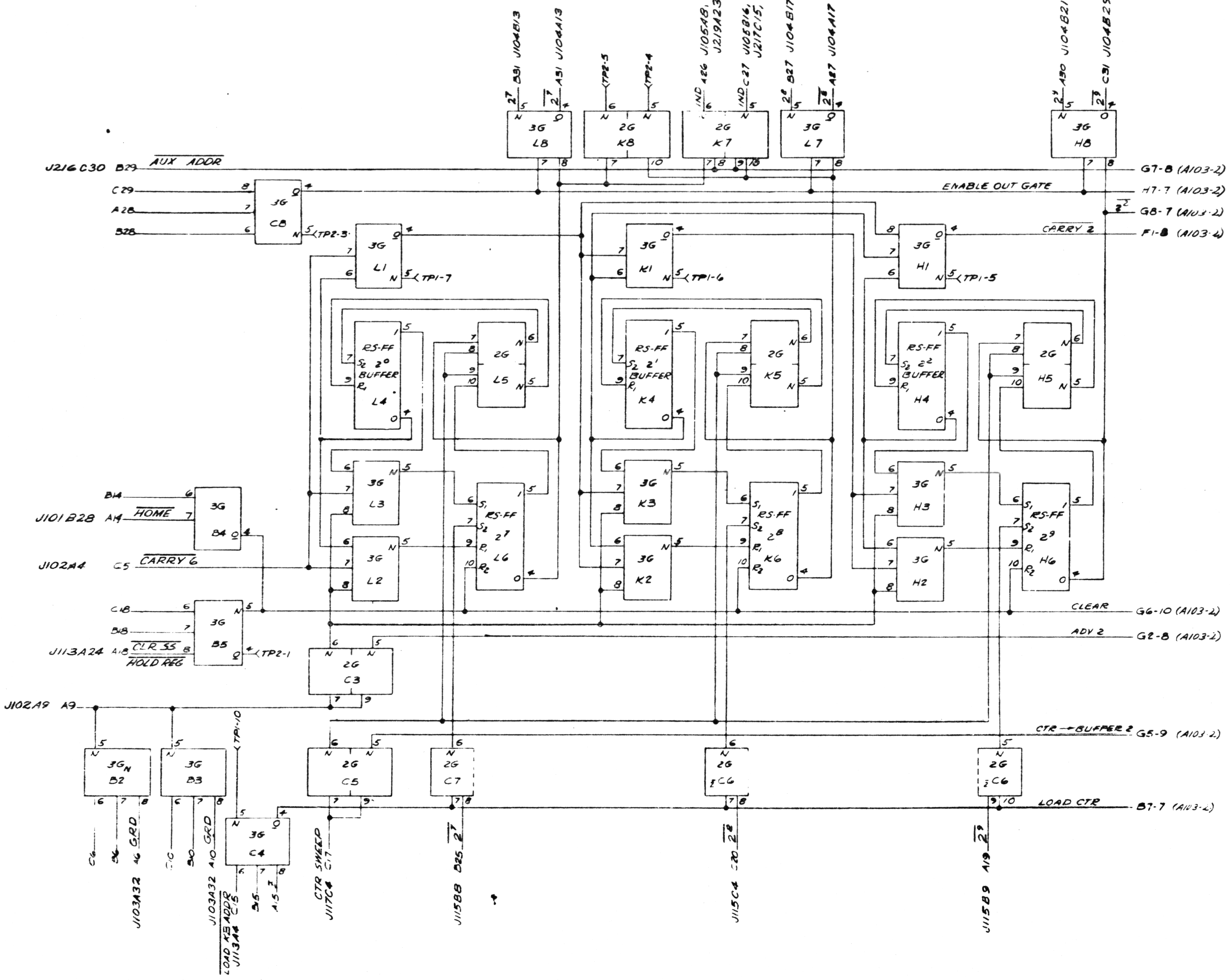

B688000E

A103-1

UNLESS OTHERWISE SPECIFIED DIMENSIONS ARE IN INCHES TOLERANCES ON DIMENSIONS
DECIMAL
2 PLACE · .03 ANGULAR ·
3 PLACE · .010 FRACTIONAL ·
HOLE DIA TOL PER SHOP STDS
MFR TO LINK STDS
MATL
FINISH

NEXT ASSY | USED ON

DR 9-30-67
DR CHK 10-14-67
DESGN CHK 10-23-67
MFG CHK
PROJ APPD 10/23/67

LINK GENERAL PRECISION, INC.
LINK GROUP, SYSTEMS DIVISION
BINGHAMTON, NEW YORK

LOGIC DIAGRAM
7-BIT COUNTER
AUXILIARY ADDRESS COUNTER

SIZE	CODE IDENT NO	DWG. NO.
D	36378	B688000E

SCALE | SHEET 6

8	7	6	5	4	3	2	1

REVISIONS				
ZONE	LTR	DESCRIPTION	DATE	APPROVED

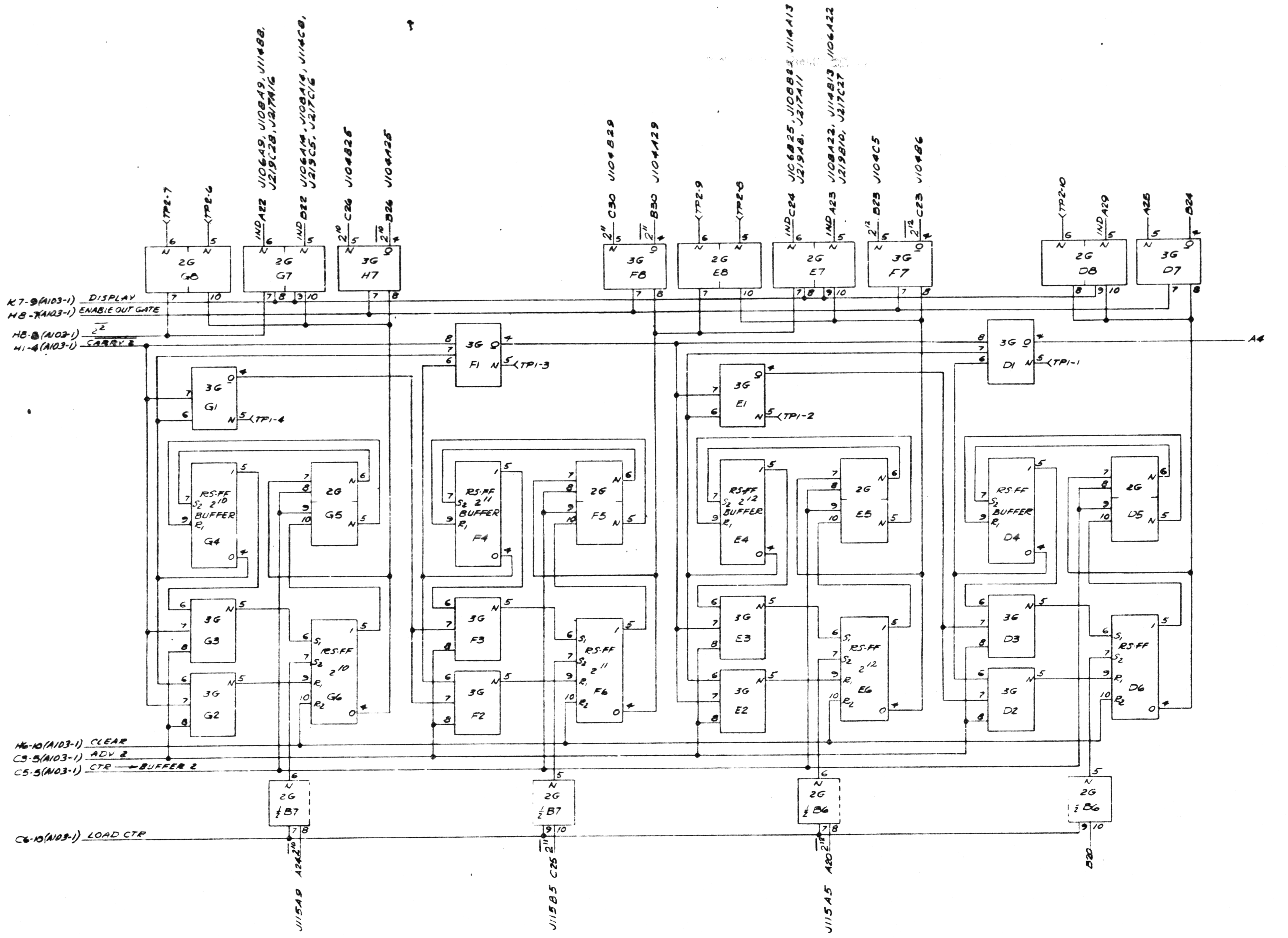

B688000E

A

A103-2

UNLESS OTHERWISE SPECIFIED
DIMENSIONS ARE IN INCHES
TOLERANCES ON DIMENSIONS
DECIMAL
2 PLACE · .03 ANGULAR
3 PLACE · .010 FRACTIONAL
HOLE DIA TOL PER SHOP STDS
MFR TO LINK STDS
MATL
FINISH

687274	AF-2079
NEXT ASSY	USED ON

DR 6-30-67
DR CHK 10-19-67
DESGN CHK
MFG CHK
PROJ APPD

LINK GENERAL PRECISION, INC.
LINK GROUP, SYSTEMS DIVISION
BINGHAMTON, NEW YORK

LOGIC DIAGRAM
7-BIT COUNTER
AUXILIARY ADDRESS COUNTER

SIZE	CODE IDENT NO	DWG NO
D	36378	B688000E

SCALE | SHEET 7

8	7	6	5	4	3	2	1

REVISIONS				
ZONE	LTR	DESCRIPTION	DATE	APPROVED

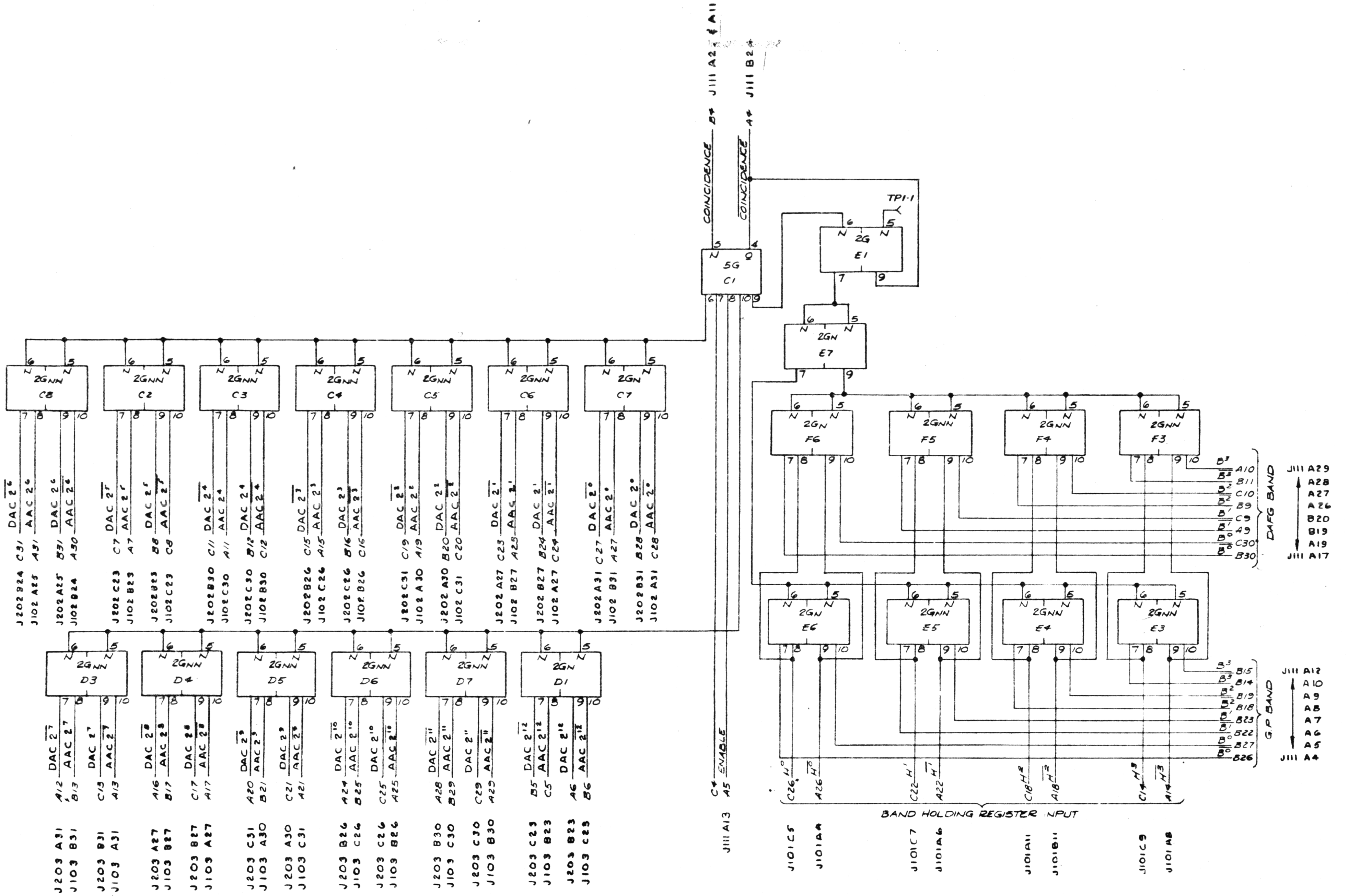

A104

UNLESS OTHERWISE SPECIFIED DIMENSIONS ARE IN INCHES TOLERANCES ON DIMENSIONS	DR	10-2-67
DECIMAL	DR CHK	
~~2 PLACE ± .03~~ ~~ANGULAR~~	DESGN CHK	
~~3 PLACE ± .010~~ ~~FRACTIONAL~~	MFG CHK	
HOLE DIA TOL PER SHOP STDS	PROJ APPD	
MFR TO LINK STDS		
MATL		
FINISH		

687520	AIF 37UT9
NEXT ASSY	USED ON

LINK GROUP, SYSTEMS DIVISION
GENERAL PRECISION, INC.
BINGHAMTON, NEW YORK

LOGIC DIAGRAM SINGLE STEP COMPARISON GATE

SIZE	CODE IDENT NO	DWG NO
D	36378	B688000E

SCALE NONE | C | SHEET 8

B688000E

[B688000E]

D	C	B	A

FORM NO F 1474 RB

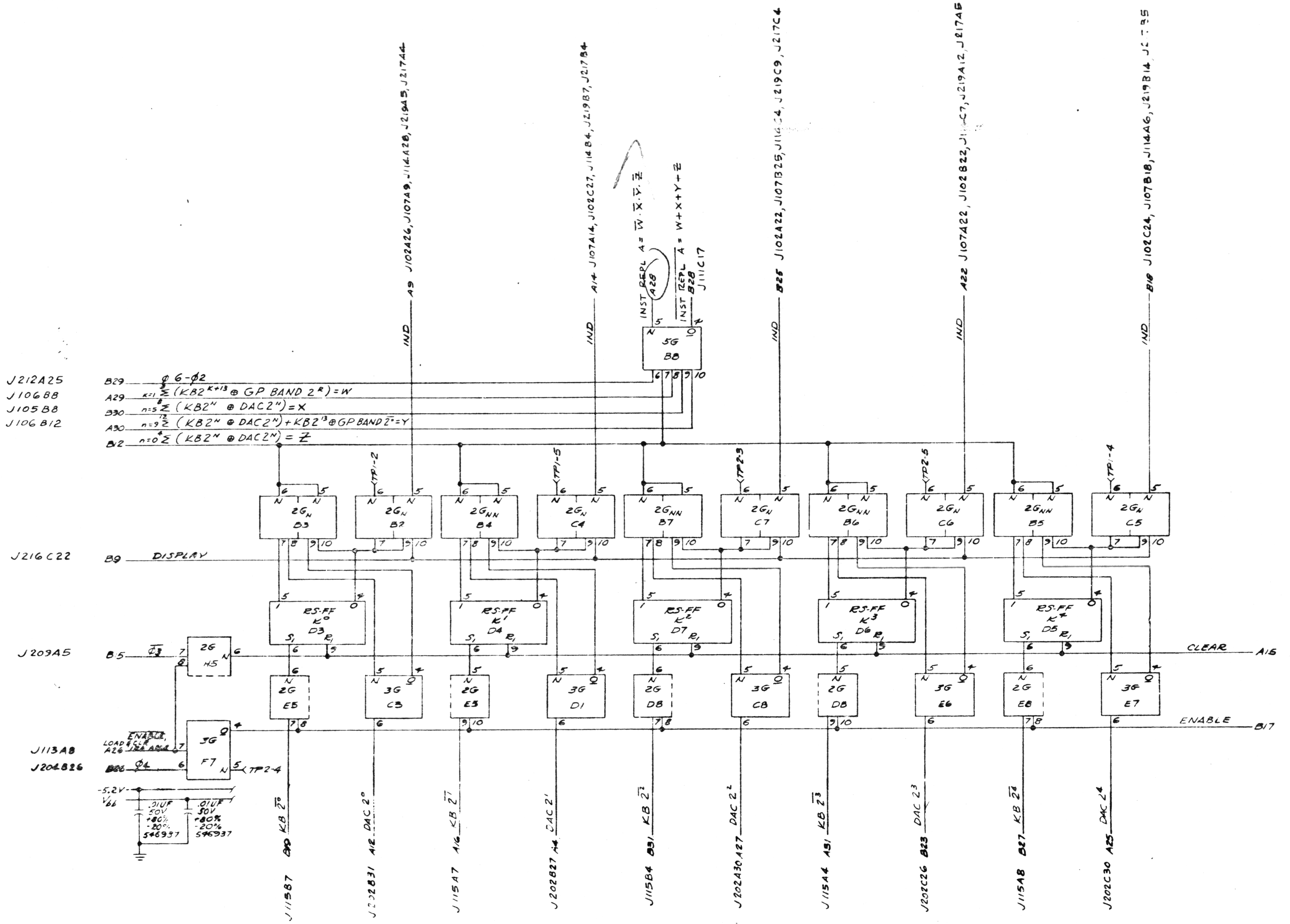

NOTE: Σ MEANS SUMMATION

A105-1

ZONE	LTR	REVISIONS DESCRIPTION	DATE / APPROVED

UNLESS OTHERWISE SPECIFIED DIMENSIONS ARE IN INCHES
TOLERANCES ON DIMENSIONS
DECIMAL
2 PLACE ± .03 ANGULAR ±
3 PLACE ± .010 FRACTIONAL ±
HOLE DIA. TOL PER SHOP STDS
MFR TO LINK STDS
MATL
FINISH

NEXT ASSY | USED ON

DR
DR CHK 10-14-67
DESGN CHK 10-23-67
MFG CHK
PROJ APPD 10/23/67

LINK GROUP, SYSTEMS DIVISION
GENERAL PRECISION, INC.
BINGHAMTON, NEW YORK

INSTRUCTION REPLACE A ADDRESS BUFFER REGISTER

SIZE D | CODE IDENT NO 36378 | DWG NO B688000E

SCALE | SHEET 9

B688000E

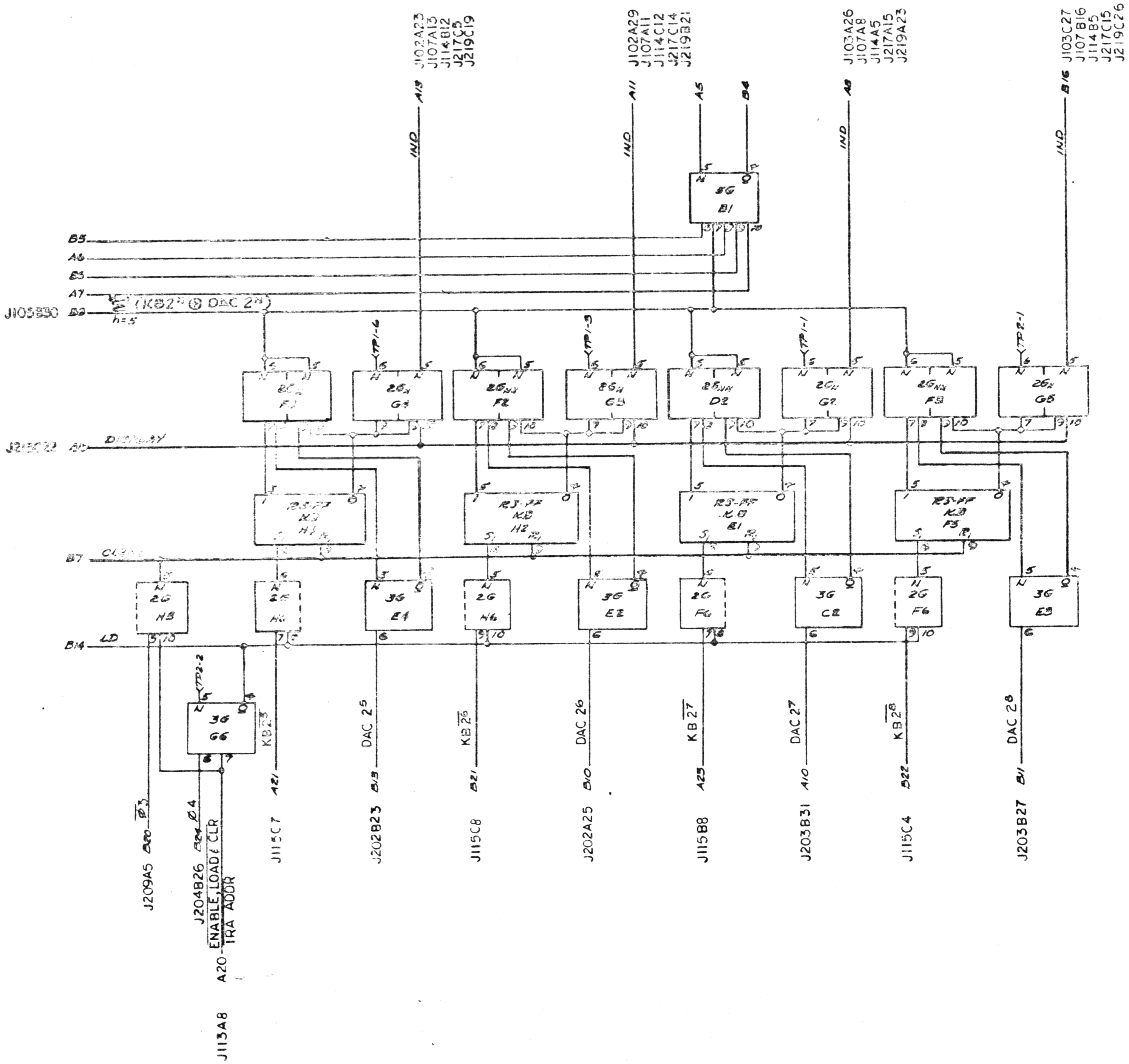

B688000E

REVISIONS				
ZONE	LTR	DESCRIPTION	DATE	APPROVED

A105-2

UNLESS OTHERWISE SPECIFIED DIMENSIONS ARE IN INCHES TOLERANCES ON DIMENSIONS
DECIMAL
~~2 PLACE ± .03 ANGULAR ±~~
~~3 PLACE ± .010 FRACTIONAL ±~~
~~HOLE DIA TOL PER ENGR STDS~~
MFR TO LINK STDS
MATL
FINISH

687354	A/F 37UT9
NEXT ASSY	USED ON

DR J. Kessler 10/12/67
DR CHK J. Harvey 10-14-67
DESIGN CHK 10-23-67
MFG. CHK
PROJ APPD 10/23/67

LINK GROUP, SYSTEMS DIVISION
GENERAL PRECISION, INC.
BINGHAMTON, NEW YORK

INSTRUCTION REPLACE A ADDRESS. BUFFER REGISTER

SIZE	CODE IDENT NO.	DWG. NO.
D	36378	B688000E

SCALE NONE   SHEET 10

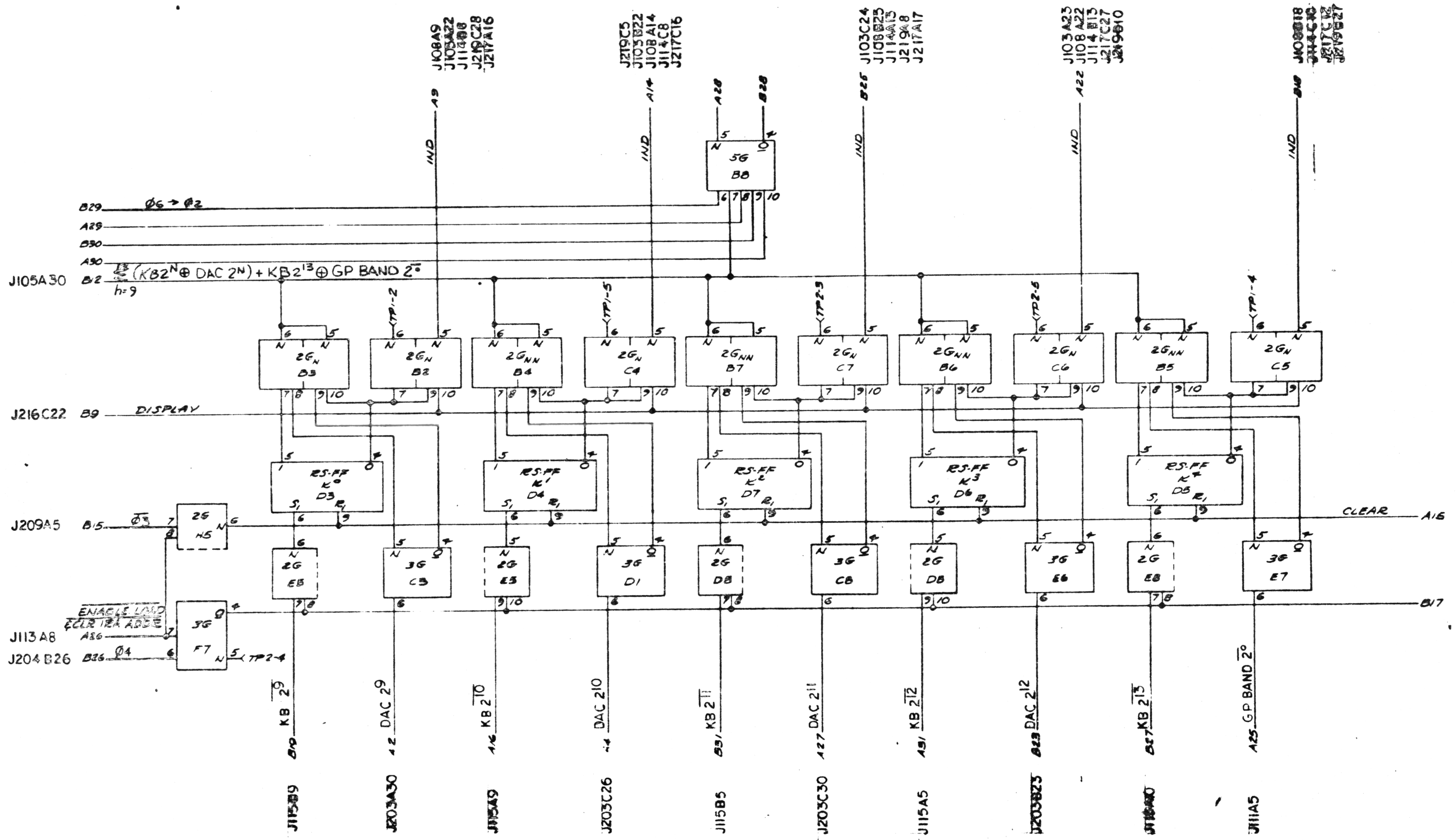

B688000E

A106-1

UNLESS OTHERWISE SPECIFIED DIMENSIONS ARE IN INCHES TOLERANCES ON DIMENSIONS
DECIMAL
2 PLACE ± .03 ANGULAR ±
3 PLACE ± .010 FRACTIONAL ±
HOLE DIA TOL PER SHOP STDS
MFR TO LINK STDS

MATL

FINISH

NEXT ASSY	USED ON
687354	A/F 37U T9

DR 9-30-67
DR CHK 10-19-67
DESIGN CHK 10-23-67
MFG CHK
PROJ APPD 10/27/67

LINK GROUP, SYSTEMS DIVISION
GENERAL PRECISION, INC.
BINGHAMTON, NEW YORK

INSTRUCTION REPLACE A ADDRESS BUFFER REGISTER

SIZE	CODE IDENT NO.	DWG. NO.
D	36378	B688000E

SCALE NONE
SHEET

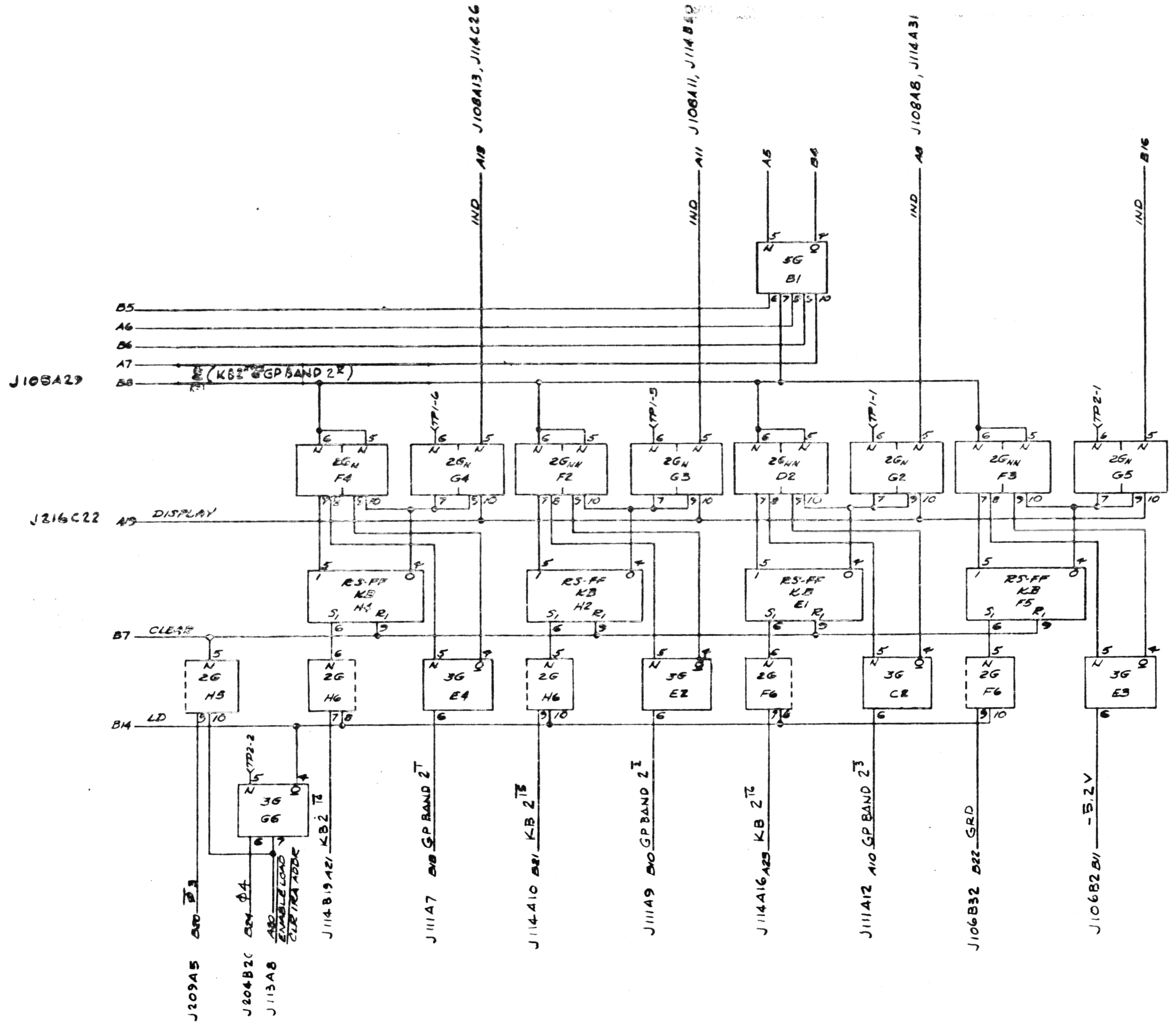

A106-2

UNLESS OTHERWISE SPECIFIED DIMENSIONS ARE IN INCHES TOLERANCES ON DIMENSIONS
DECIMAL
2 PLACE ± .03 ANGULAR ±
3 PLACE ± .010 FRACTIONAL ±
HOLE DIA TOL PER SHOP STDS
MFR TO LINK STDS
MATL
FINISH

DR
DR CHK
DESGN CHK
MFG CHK
PROJ APPD

LINK GROUP, SYSTEMS DIVISION
LINK GENERAL PRECISION, INC.
BINGHAMTON, NEW YORK

…TRODUCTION REPLACE A
ADDRESS BUFFER REGISTER

SIZE	CODE IDENT NO	DWG NO
D	36378	B688000E

SCALE NONE
SHEET 12

NEXT ASSY
USED ON

REVISIONS

ZONE	LTR	DESCRIPTION	DATE	APPROVED

B688000E

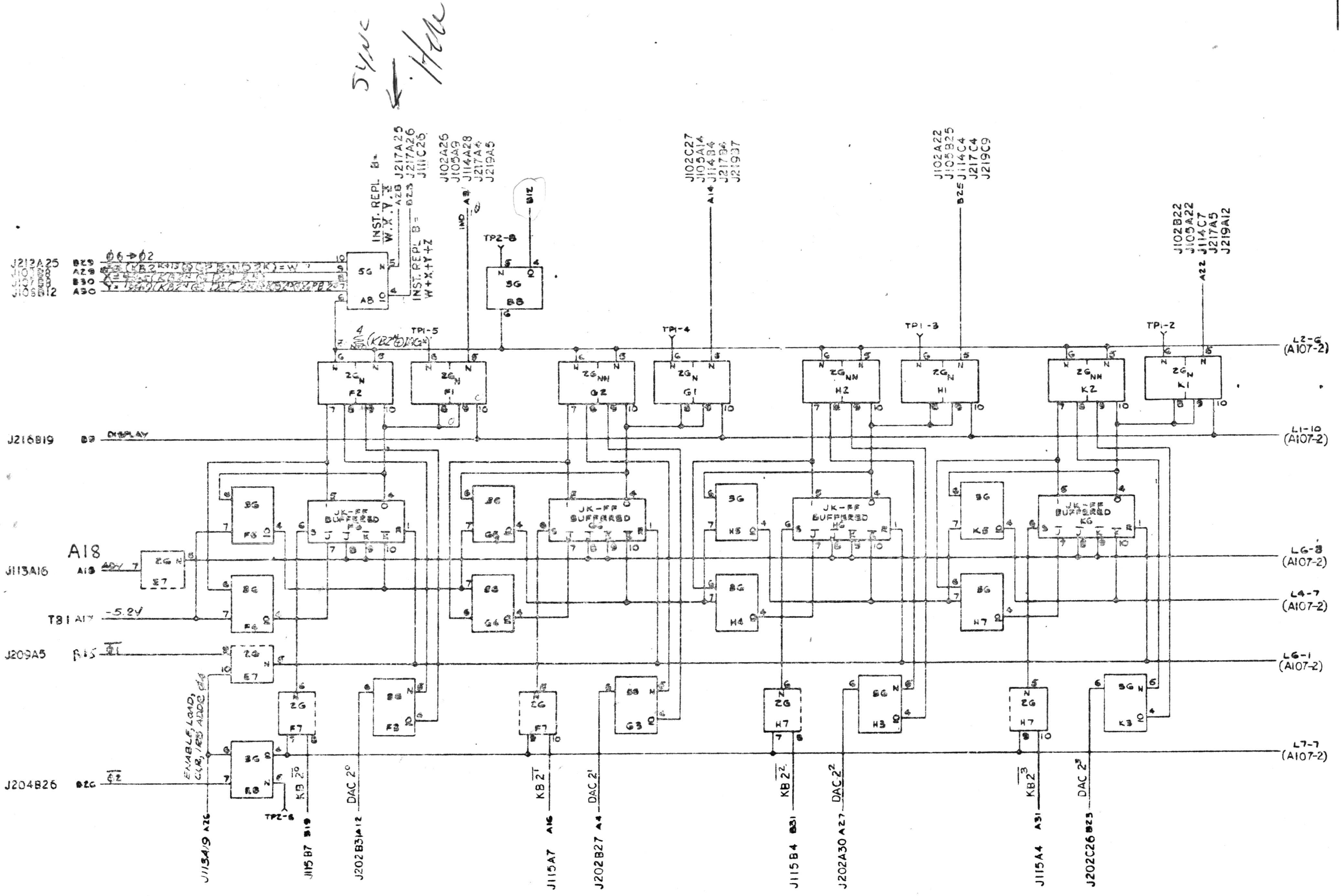

A107-1

UNLESS OTHERWISE SPECIFIED DIMENSIONS ARE IN INCHES TOLERANCES ON DIMENSIONS		
DECIMAL		
2 PLACE ± .03 ANGULAR ±	DR J. Kusler 10-2-67	LINK GENERAL PRECISION, INC. LINK GROUP, SYSTEMS DIVISION BINGHAMTON, NEW YORK
3 PLACE ± .010 FRACTIONAL ±	DR CHK 11-14-67	INSTRUCTION REPLACE B ADDRESS BUFFER REGISTER
HOLE DIA TOL PER SHOP STDS	DESIGN CHK 10-23-67	
MFR TO LINK STDS	MFG CHK	
MATL	PROJ APPD 10/25/67	SIZE D · CODE IDENT NO 36378 · DWG NO B688000E
FINISH		SCALE NONE · SHEET 13

688676	A/F370-T9
NEXT ASSY	USED ON

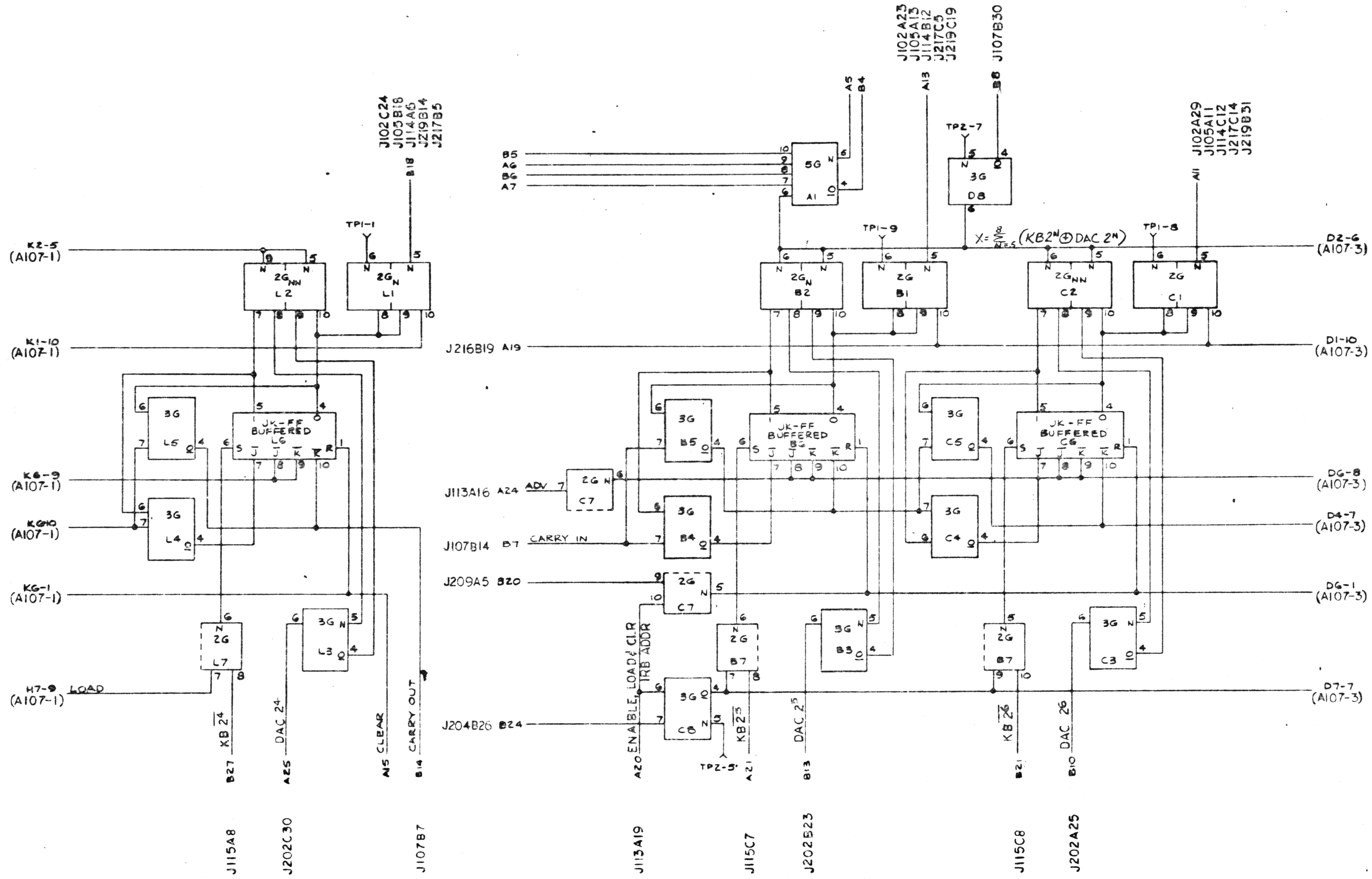

B688000E

A107-2

UNLESS OTHERWISE SPECIFIED DIMENSIONS ARE IN INCHES TOLERANCES ON DIMENSIONS
DECIMAL
2 PLACE ± .03 ANGULAR ±
3 PLACE ± .010 FRACTIONAL ±
HOLE DIA TOL PER SHOP STDS
MFR TO LINK STDS
MATL
FINISH

DR 10-3-67
DR CHK J. Hervey 11-14-67
DESIGN CHK 10-23-67
MFG CHK
PROJ APPD 11/13/67

LINK GROUP, SYSTEMS DIVISION
GENERAL PRECISION, INC.
BINGHAMTON, NEW YORK

INSTRUCTION REPLACE
B ADDRESS BUFFER REGISTER

SIZE	CODE IDENT NO.	DWG. NO
D	36378	B688000E

SCALE NONE SHEET 1

089676	A/F37U-T9
NEXT ASSY	USED ON

ZONE	LTR	REVISIONS DESCRIPTION	DATE	APPROVED

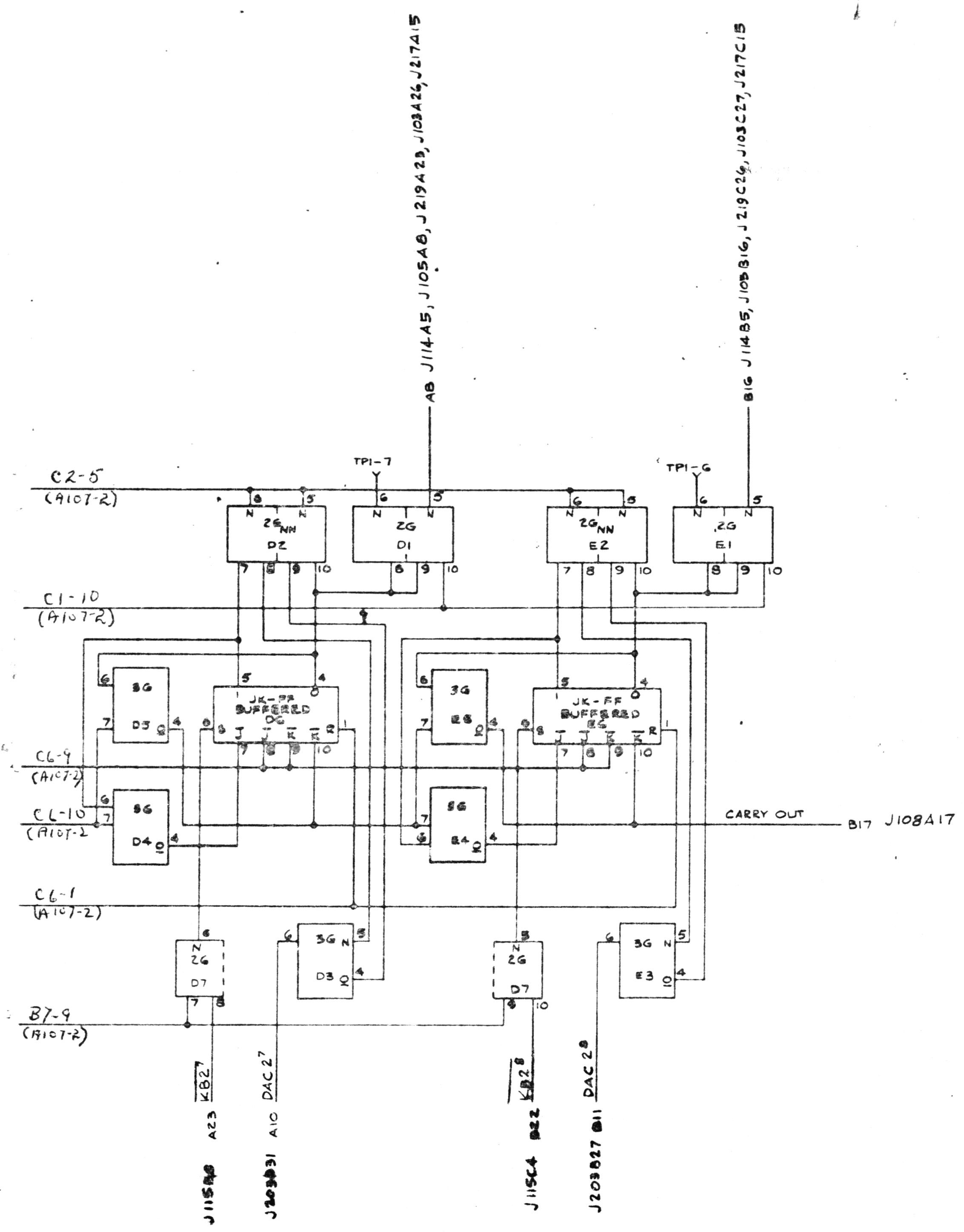

B688000E

A

A107-3

UNLESS OTHERWISE SPECIFIED
DIMENSIONS ARE IN INCHES
TOLERANCES ON DIMENSIONS
DECIMAL
2 PLACE ± .03 ANGULAR ±
3 PLACE ± .010 FRACTIONAL ±
HOLE DIA TOL PER SHOP STDS

MFR TO LINK STDS

MATL

FINISH

DR 1-30-67
DR CHK 10-14-67
DESIGN CHK 10-23-67
MFG CHK
PROJ APPD

NEXT ASSY	USED ON
688000	A11 370 IS

LINK GROUP, SYSTEMS DIVISION
GENERAL PRECISION, INC.
BINGHAMTON, NEW YORK

INSTRUCTION REPLACE
B ADDRESS BUFFER
REGISTER

SIZE	CODE IDENT NO.	DWG NO.
D	36378	B688000E

SCALE NONE

SHEET 15

688000E

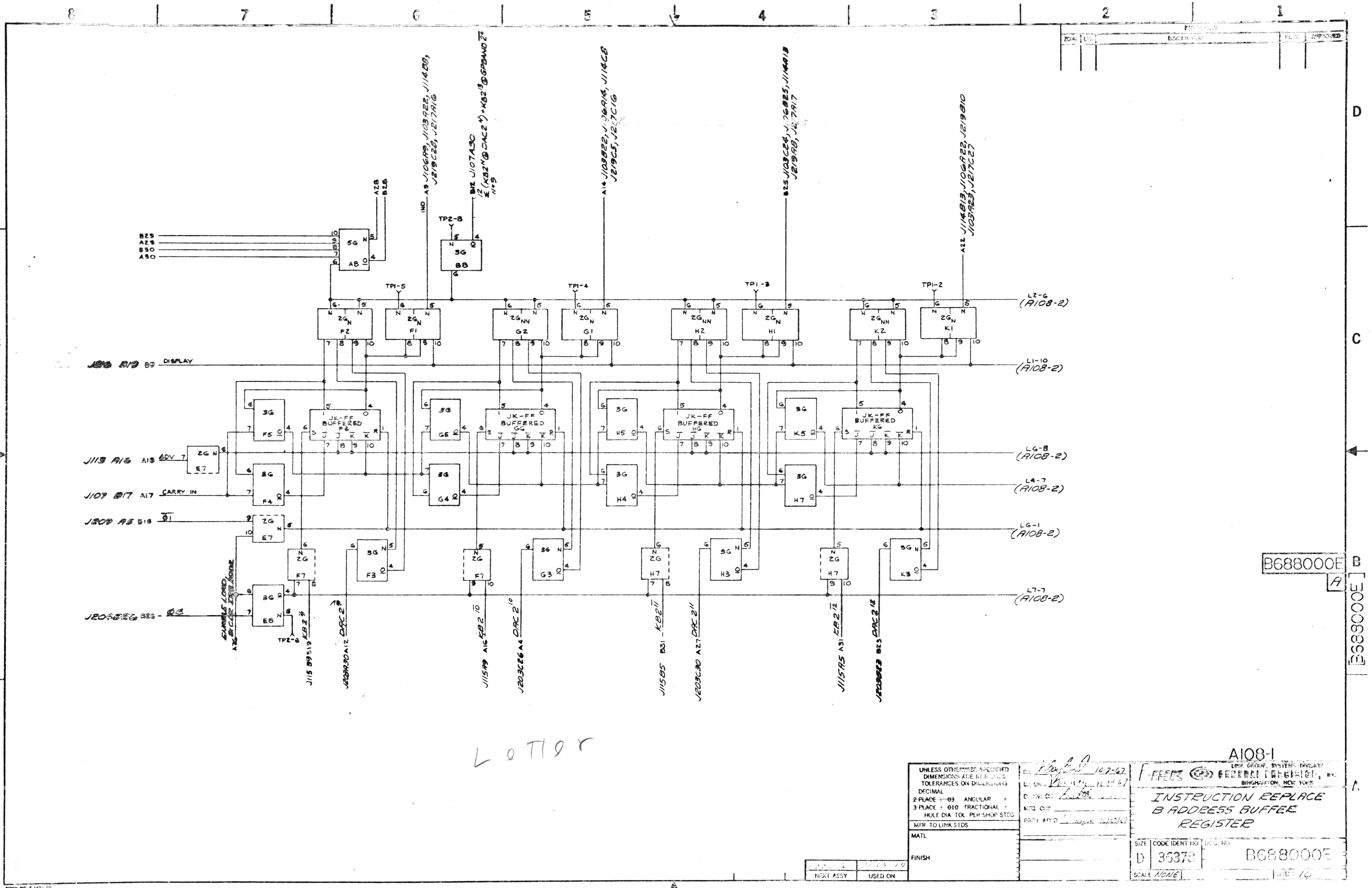

JK-FF BUFFERED F6
JK-FF BUFFERED G6
JK-FF BUFFERED H6
JK-FF BUFFERED K6
DISPLAY
ADV
CARRY IN
L2-6 (A108-2)
L1-10 (A108-2)
L6-8 (A108-2)
L4-7 (A108-2)
L6-1 (A108-2)
L7-7 (A108-2)
TP1-5
TP1-4
TP1-3
TP1-2
TP2-8
B688000E
A108-1
UNLESS OTHERWISE SPECIFIED DIMENSIONS ARE IN INCHES TOLERANCES ON DIMENSIONS
DECIMAL
MFR TO LINK STDS
MATL
FINISH
NEXT ASSY
USED ON
LINK GROUP, SYSTEMS DIVISION
GENERAL PRECISION, INC.
BINGHAMTON, NEW YORK
INSTRUCTION REPLACE
B ADDRESS BUFFER
REGISTER
SIZE D
CODE IDENT NO 36378
B688000E
SCALE NONE

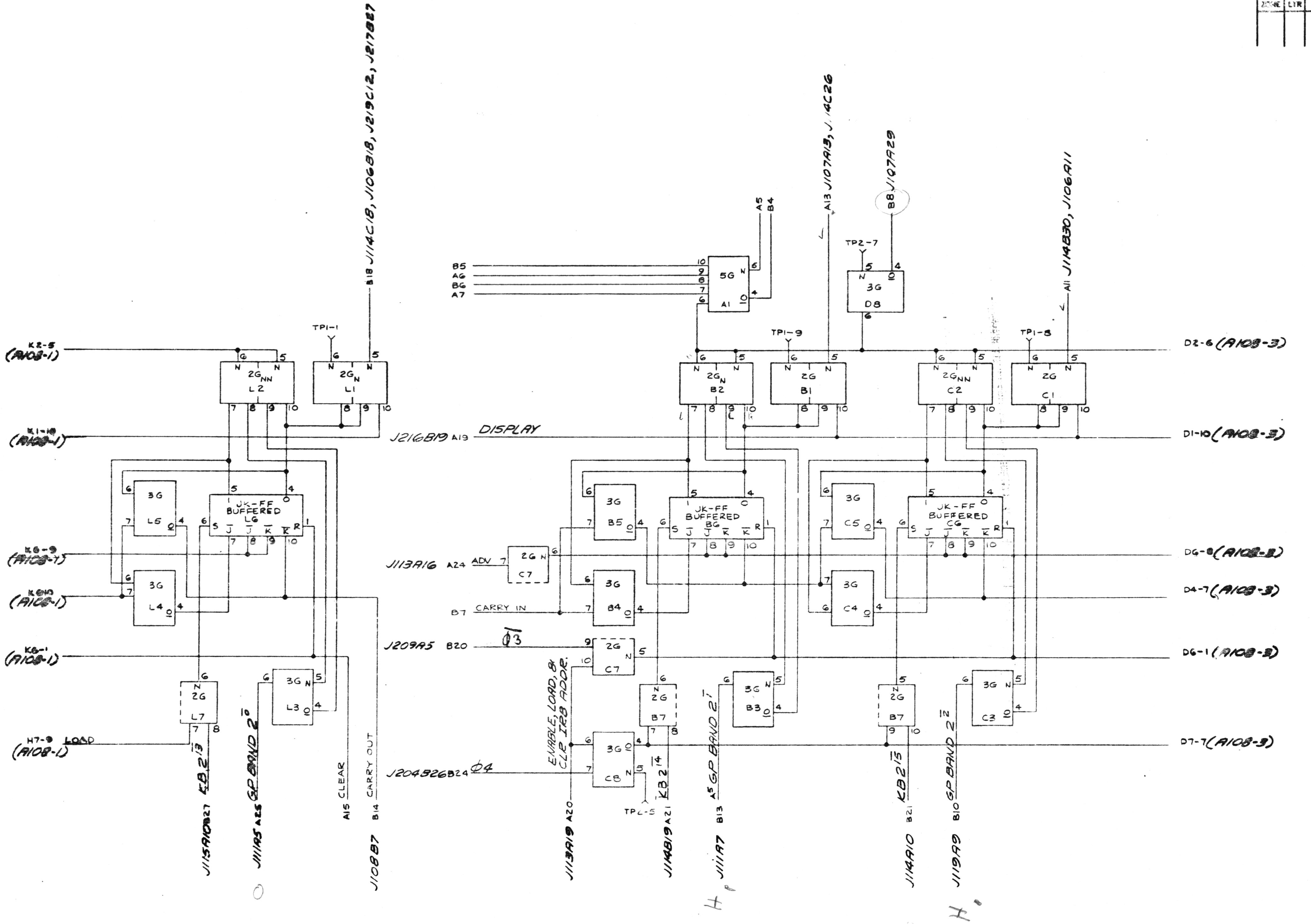

	3	2	1	0
1	0	0	0	1
2	0	0	1	0
3	0	0	1	1
4	0	1	0	0
5	0	1	0	1
6	0	1	1	0
7	0	1	1	1
8	1	0	0	0

B688000E

A108-2

UNLESS OTHERWISE SPECIFIED DIMENSIONS ARE IN INCHES TOLERANCES ON DIMENSIONS
DECIMAL
2 PLACE ± .03 ANGULAR ±
3 PLACE ± .010 FRACTIONAL ±
HOLE DIA TOL PER SHOP STDS
MFR TO LINK STDS
MATL
FINISH

NEXT ASSY | USED ON

DR
DR CHK 10-14-67
DESGN CHK 10-23-67
MFG CHK
PROJ APPD [illegible]

LINK GENERAL PRECISION, INC.
LINK GROUP, SYSTEMS DIVISION
BINGHAMTON, NEW YORK

INSTRUCTION REPLACE B ADDRESS BUFFER REGISTER

SIZE D | CODE IDENT NO. 36378 | DWG. NO. B688000E

SCALE NONE | SHEET 17

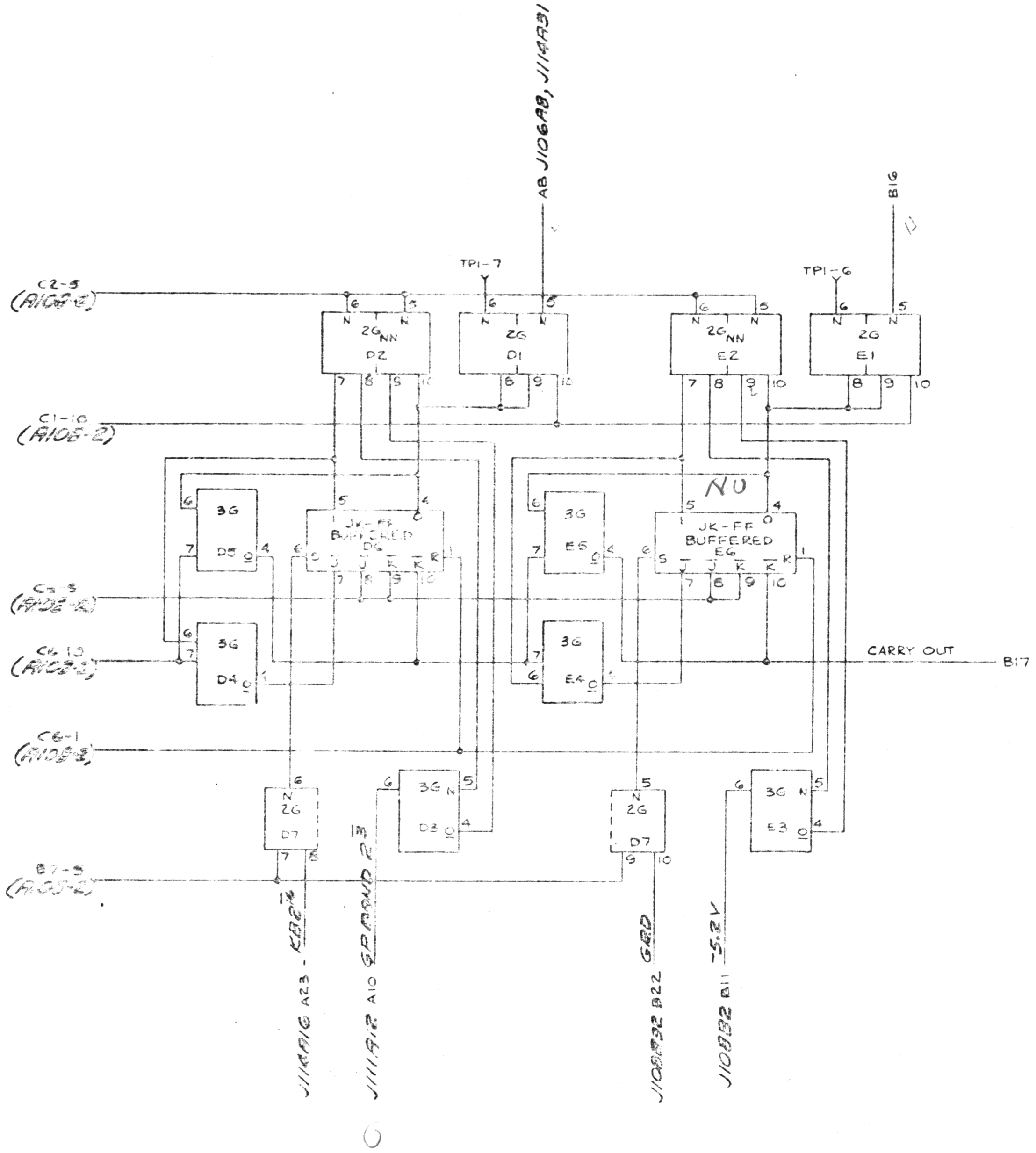

B688000E

A

A108-3

LINK GROUP SYSTEMS DIVISION
LINK GENERAL PRECISION, INC.
BINGHAMTON, N.Y.

INSTRUCTION REPLACE B
ADDRESS BUFFER
REGISTER

SIZE	CODE IDENT NO.	DWG NO.
D	36378	B688000E

SCALE NONE

NEXT ASSY | USED ON

MATL

FINISH

PROJ APPD

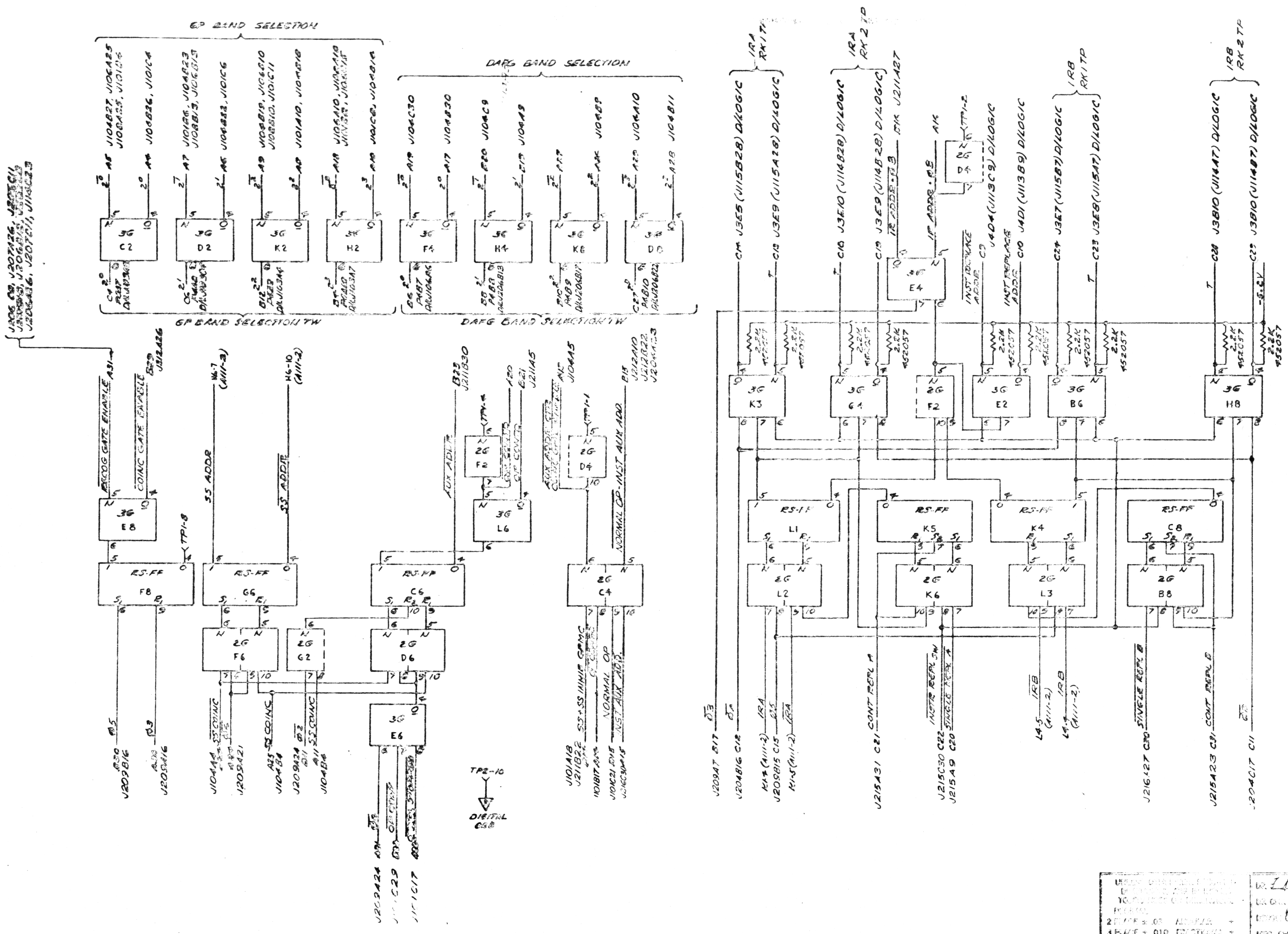

A111-1

DR. 12-67
DR. CHK. 12-14-67
PROJ. APPD 12/22/67

GENERAL PRECISION, INC.

LOGIC DIAGRAM- COINCIDENCE GATE ENABLES AND TIMING

B68000E

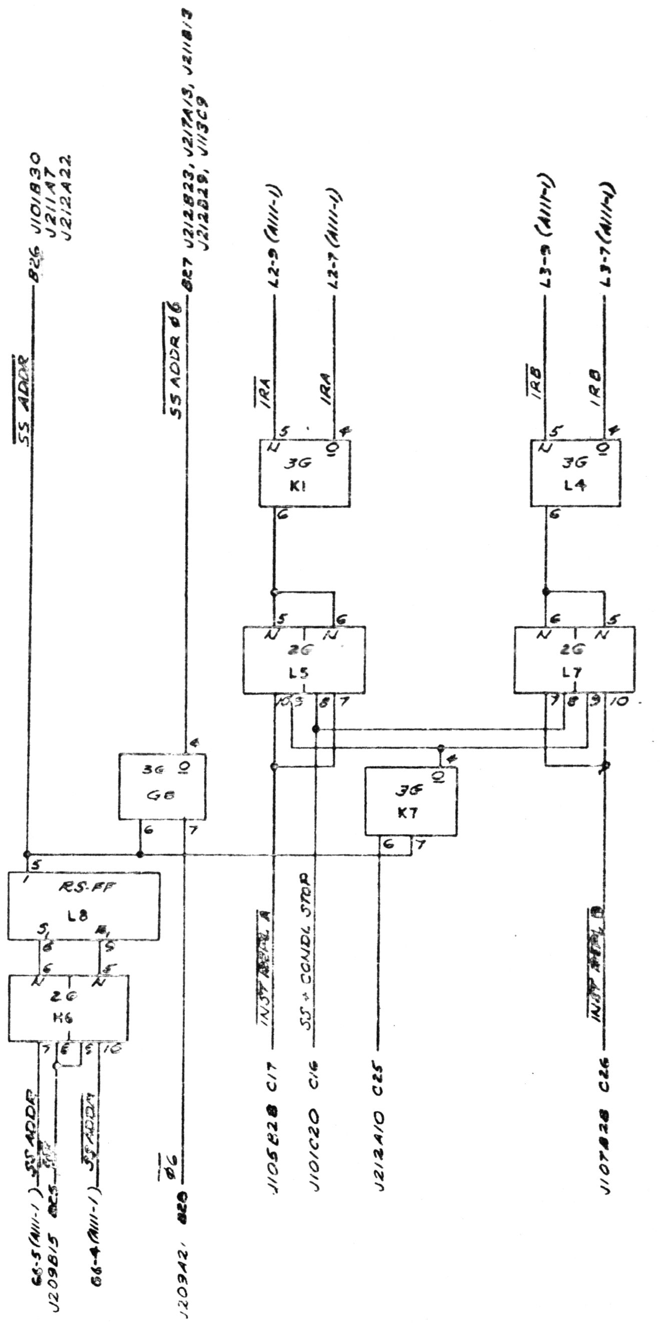

A111-2

B688000E

UNLESS OTHERWISE SPECIFIED DIMENSIONS ARE IN INCHES TOLERANCES ON DIMENSIONS
DECIMAL
2 PLACE ± .03 ANGULAR ±
3 PLACE ± .010 FRACTIONAL ±
HOLE DIA. TOL. FOR STOP STUD

MATL

FINISH

ENG. CHK

PROJ. APPD

GENERAL PRECISION, INC.
BINGHAMTON, NEW YORK

LOGIC DIAGRAM—
COINCIDENCE GATE
ENABLE AND TIMING

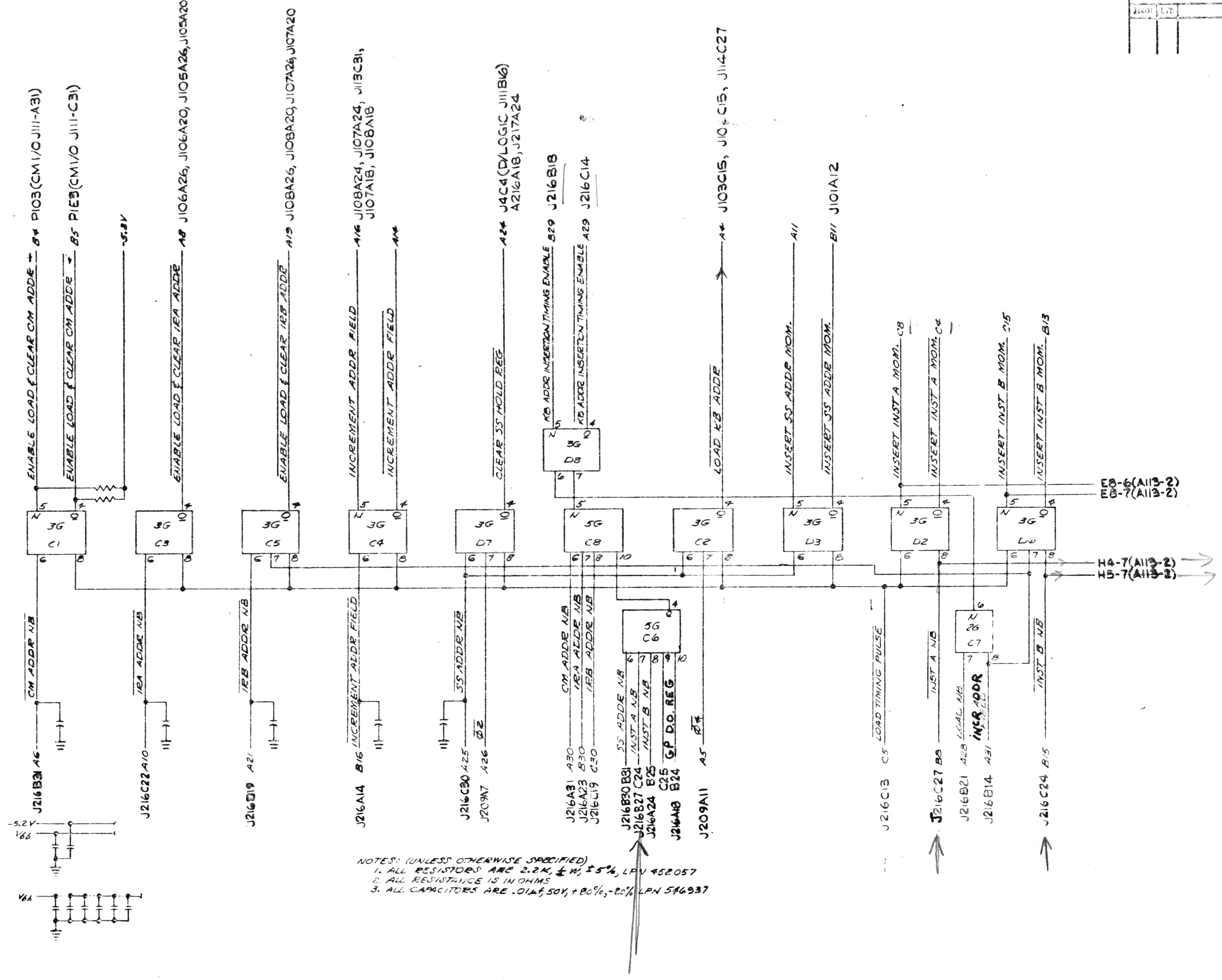

NOTES: (UNLESS OTHERWISE SPECIFIED)
1. ALL RESISTORS ARE 2.2K, ¼W, ±5%, LPN 452057
2. ALL RESISTANCE IS IN OHMS
3. ALL CAPACITORS ARE .01µf, 50V, +80%, -20% LPN 546937

A113-1

B6880005

UNLESS OTHERWISE SPECIFIED DIMENSIONS ARE IN INCHES TOLERANCES ON DIMENSIONS
DECIMAL
2 PLACE ± .03 ANGULAR ±
3 PLACE ± .010 FRACTIONAL ±
HOLE DIA. TOL. PER SHOP STDS
MFR. TO LINK STDS

MATL

FINISH

NEXT ASSY | USED ON

DR 3-30-67
DR CHK
DESGN CHK
MFG. CHK
PROJ. APPD

LINK GROUP SYSTEMS DIVISION
GENERAL PRECISION, INC
BINGHAMTON, NEW YORK

LOGIC DIAGRAM — KEYBOARD DATA CONTROL

SIZE D | CODE IDENT NO 36378 | DWG NO B6880005

SCALE NONE | SHEET 21

REVISIONS				
ZONE	LTR	DESCRIPTION	DATE	APPROVED

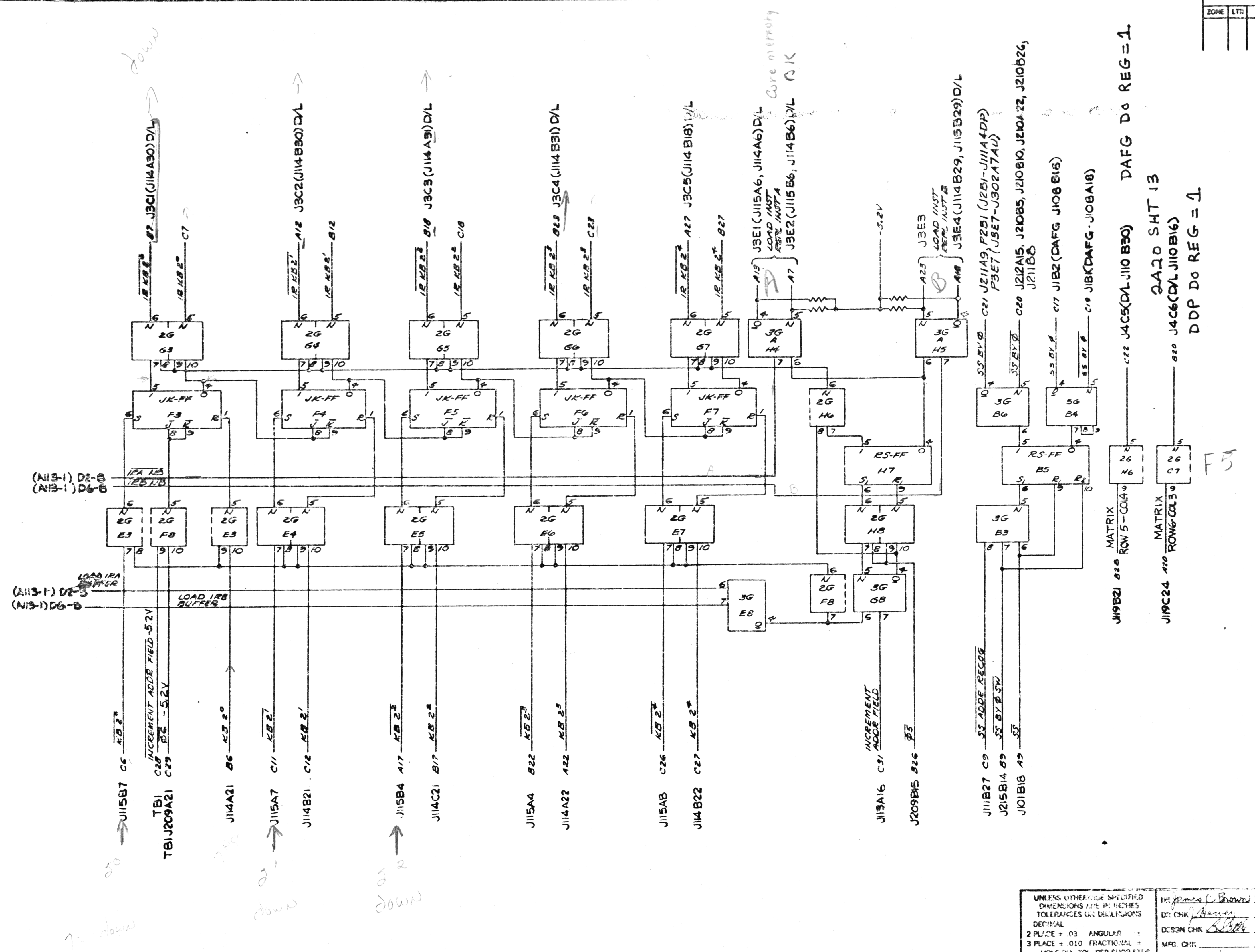

A113-2

B668000E

UNLESS OTHERWISE SPECIFIED
DIMENSIONS ARE IN INCHES
TOLERANCES ON DIMENSIONS
DECIMAL
2 PLACE ± .03 ANGULAR ±
3 PLACE ± .010 FRACTIONAL ±
HOLE DIA. TOL. PER S002 STDS
MFR. TO LINK STD.
MATL
FINISH

DR James C. Brown 9-30-67
DR CHK 10-14-67
DESIGN CHK
MFG. CHK
PROJ. APPD 11/23/67

LINK GROUP, SYSTEMS DIVISION
LINK GENERAL PRECISION, INC.
BINGHAMTON, NEW YORK

LOGIC DIAGRAM-
KEYBOARD DATA
CONTROL

SIZE D | CODE IDENT NO 36278 | DWG NO B668000E
SCALE NONE | SHEET 22

NEXT ASSY | USED ON

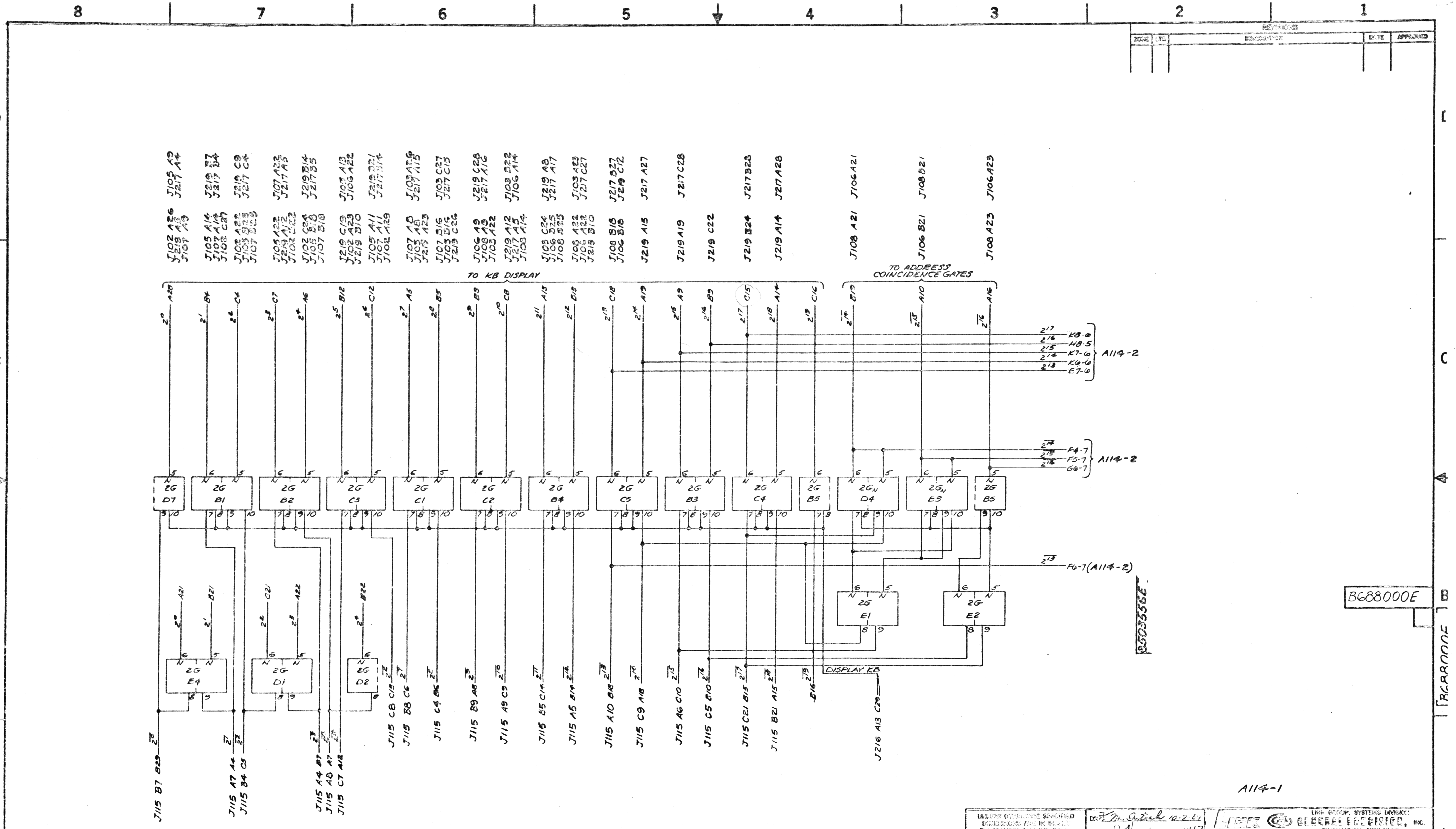

UNLESS OTHERWISE SPECIFIED DIMENSIONS ARE IN INCHES TOLERANCES ON DIMENSIONS
DECIMAL
2 PLACE ± .03 ANGULAR ±
3 PLACE ± .010 FRACTIONAL ±

LINK GROUP, SYSTEMS DIVISION
GENERAL PRECISION, INC.
BINGHAMTON, NEW YORK

LOGIC DIAGRAM
KEYBOARD FORMAT
DECODING, ENCODING

SIZE D | CODE IDENT NO. 36378 | DWG. NO. B688000E
SCALE NONE | SHEET 23

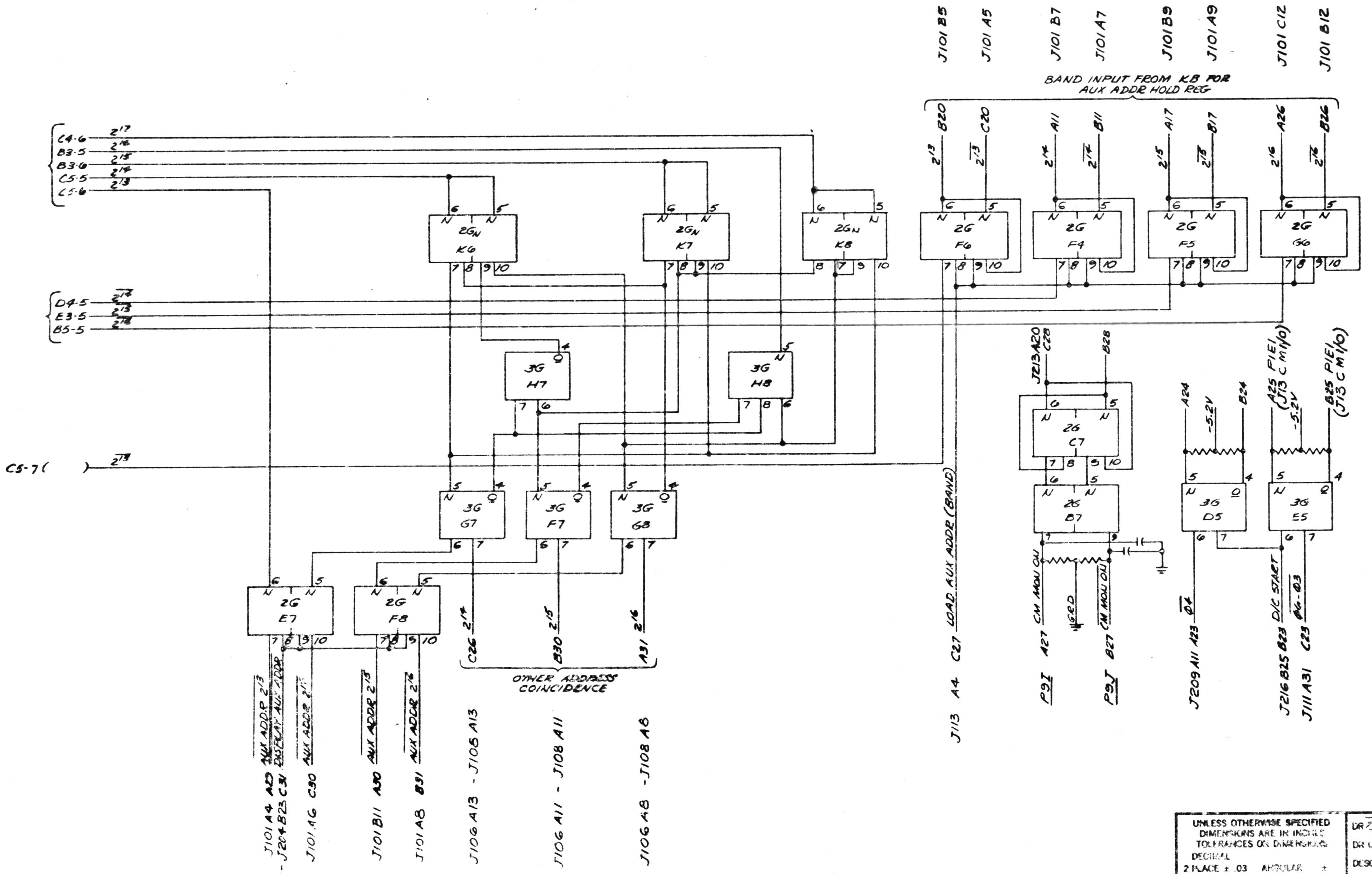

A114-2

B688000E

UNLESS OTHERWISE SPECIFIED DIMENSIONS ARE IN INCHES TOLERANCES ON DIMENSIONS DECIMAL 2 PLACE ± .03 ANGULAR ± 3 PLACE ± .010 FRACTIONAL ± HOLE DIA. TOL. PER STD.	DR 10-2-67
MFR. TO LINK STDS	DR CHK 10-14-67
MATL	DESIGN CHK 10-23-67
FINISH	MFG. CHK
	PROJ. APPD 10/23/67

687556 NEXT ASSY — A/F370-T9 USED ON

LINK GROUP, SYSTEMS DIVISION
GENERAL PRECISION, INC.
BINGHAMTON, NEW YORK

LOGIC DIAGRAM KEYBOARD FORMAT DECODING, ENCODING

SIZE	CODE IDENT NO.	DWG. NO.
D	36378	B688000E

SCALE NONE — SHEET 2

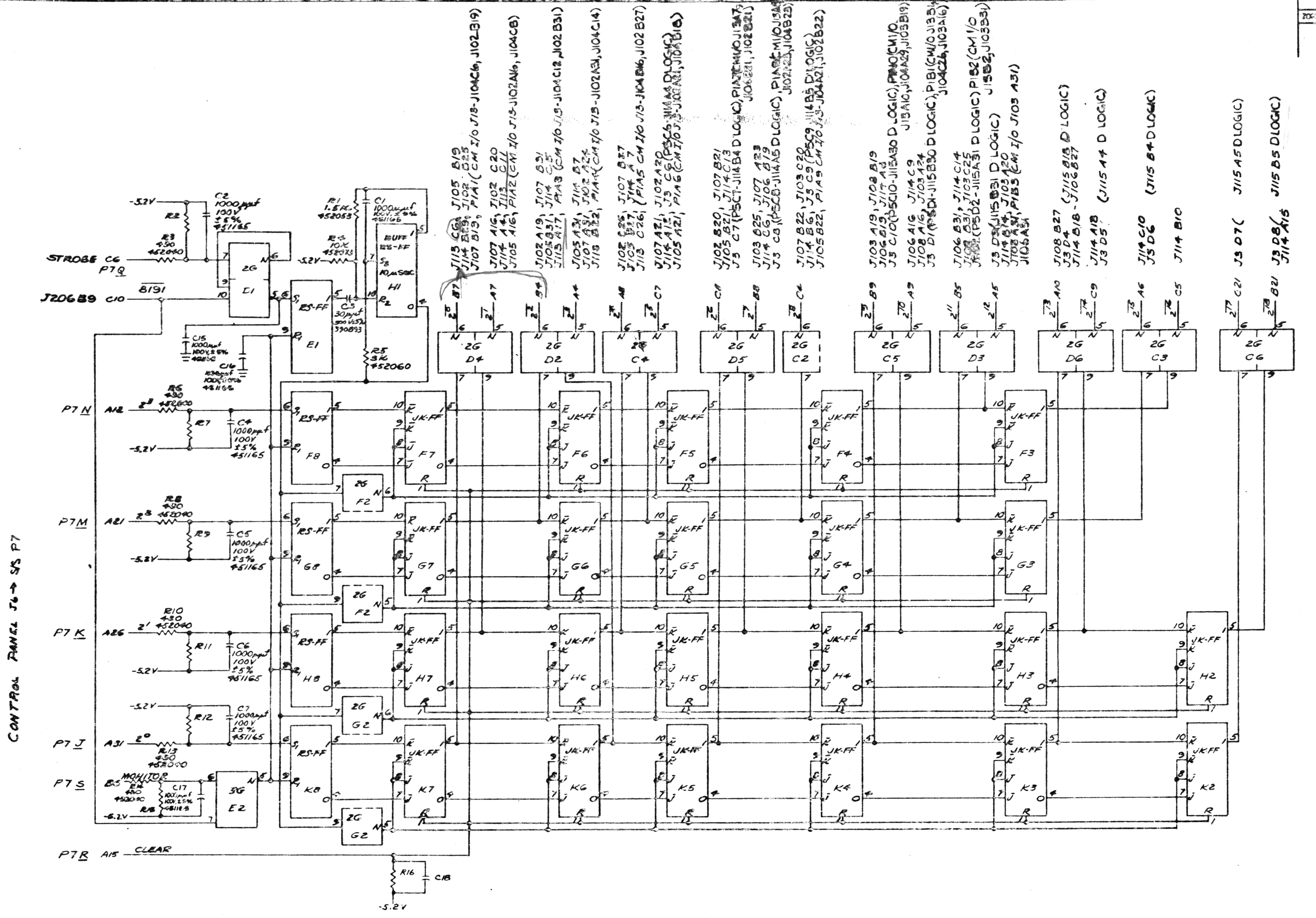

A 115

687542	A/F 37U-79
NEXT ASSY	USED ON

UNLESS OTHERWISE SPECIFIED
DIMENSIONS ARE IN INCHES
TOLERANCES ON DIMENSIONS
DECIMAL
2 PLACE ± .03 ANGULAR ±
3 PLACE ± .010 FRACTIONAL ±
HOLE DIA. TOL. PER SHOP STDS.

MFR. TO LINK STDS.
MATL
FINISH

DR 10-2-67
DR CHK 10-14-67
DESIGN CHK 10-23-67
MFG. CHK
PROJ. APPD 10/23/67

LINK GROUP, SYSTEMS DIVISION
GENERAL PRECISION, INC.
BINGHAMTON, NEW YORK

LOGIC DIAGRAM KEYBOARD DISPLAY LOADER & BUFFER

SIZE D | CODE IDENT NO 30878 | DWG. NO. B688000E
SCALE NONE | SHEET 25

B688000E

A

B688000E

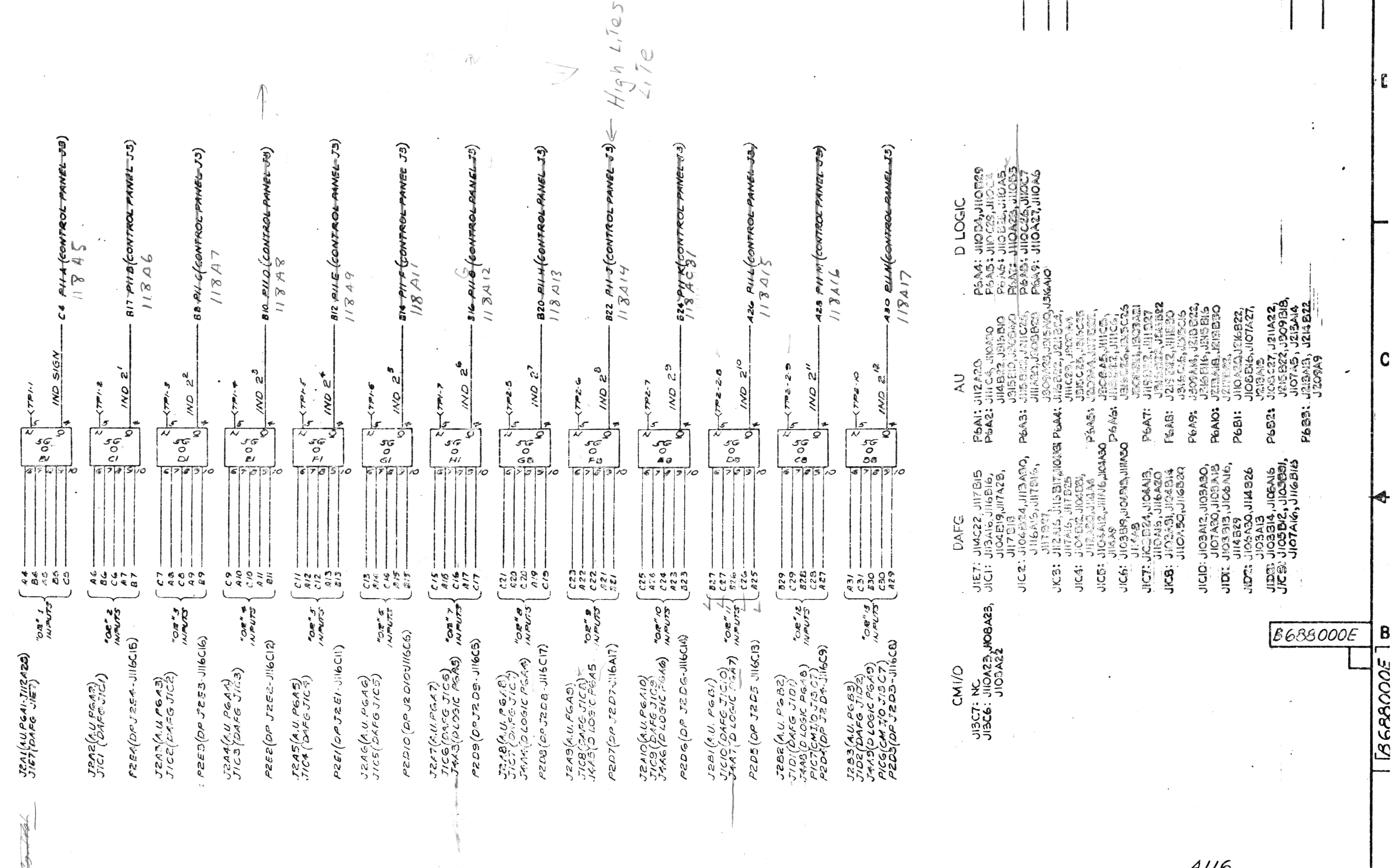

A116

UNLESS OTHERWISE SPECIFIED DIMENSIONS ARE IN INCHES TOLERANCES ON DIMENSIONS DECIMAL 2 PLACE ± .03 ANGULAR ± 3 PLACE ± .010 FRACTIONAL ± HOLE DIA. TOL. PER SHOP STDS	
MFR TO LINK STDS	
MAT'L	
FINISH	
6B7540	7/F370-79
NEXT ASSY	USED ON

DR 10-6-67
DR CHK 10-14-67
DESIGN CHK 10-23-67
MFG CHK
PROJ APPD 10/23/67

LINK GROUP, SYSTEMS DIVISION
GENERAL PRECISION, INC.
BINGHAMTON, NEW YORK

LOGIC DIAGRAM
13-5 INPUTS "OR" GATES

SIZE	CODE IDENT NO.	DWG. NO.
D	36378	B688000E

SCALE

8	7	6	5	4	3	2	1

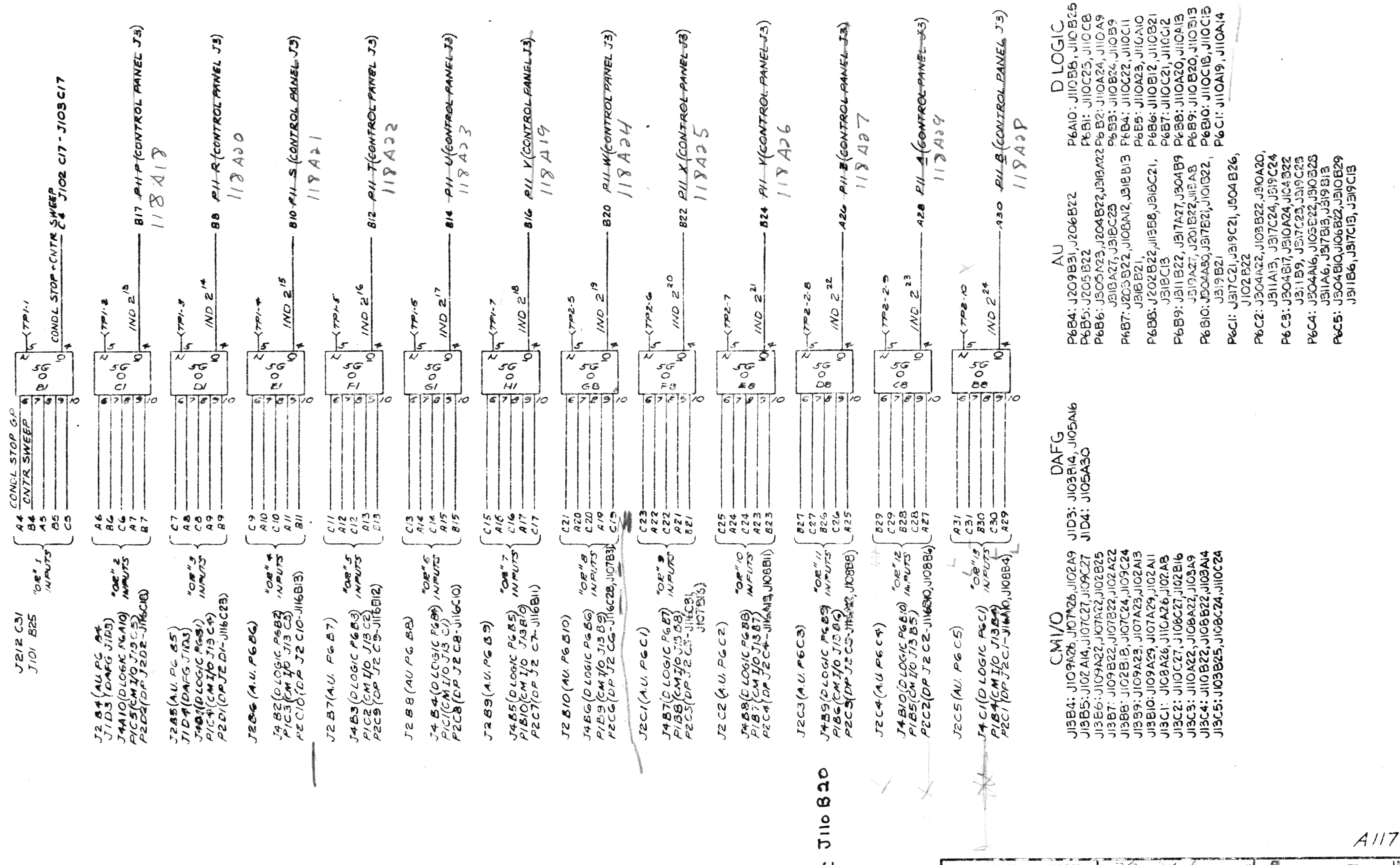

B688000E

A117

UNLESS OTHERWISE SPECIFIED DIMENSIONS ARE IN INCHES TOLERANCES ON DIMENSIONS DECIMAL 2 PLACE ± .03 ANGULAR ± 3 PLACE ± .010 FRACTIONAL ± HOLE DIA. TOL. PER SHOP STDS.	DR 10-3-67
FIN. TO LINK STDS.	DR CHK 11-14-67
MATL	DESIGN CHK
FINISH	MFG. CHK
	PROJ. APPD 10/25/67

LINK GROUP, SYSTEMS DIVISION
GENERAL PRECISION, INC.
BINGHAMTON, NEW YORK

LOGIC DIAGRAM
13-5 INPUT "OR" GATES

SIZE	CODE IDENT NO.	DWG NO.
D	30878	B688000E

SCALE NONE | SHEET 27

JE2040 | NE-70-19
NEXT ASSY | USED ON

–	RELEASE NO 05017-305
B	REVISED PER ECN 5557

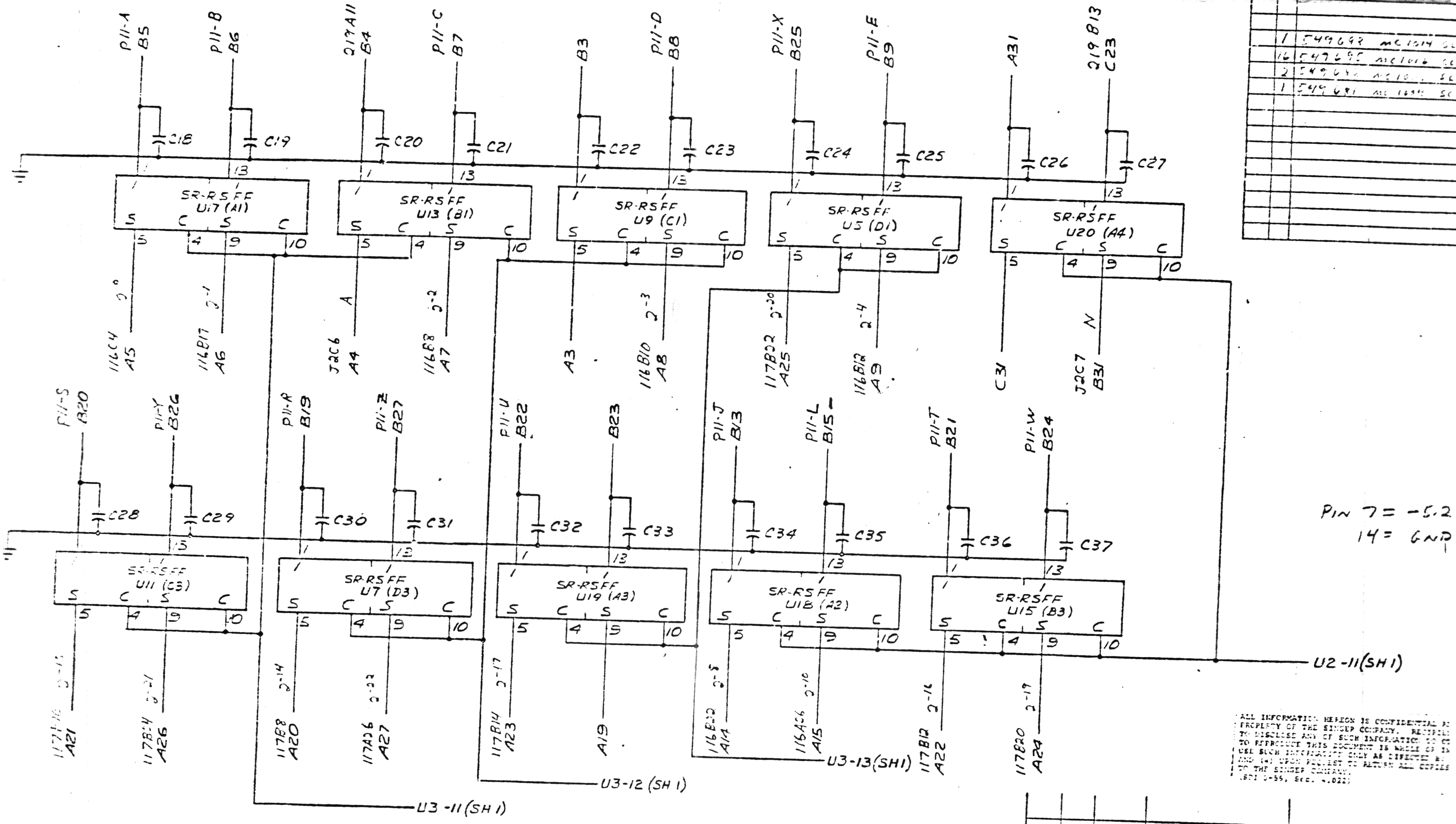

PIN 7 = -5.2
14 = GND

ALL INFORMATION HEREON IS CONFIDENTIAL AND PROPERTY OF THE SINGER COMPANY. RECIPIENT TO DISCLOSE ANY OF SUCH INFORMATION TO OTHERS TO REPRODUCE THIS DOCUMENT IS WHOLE OR IN PART USE SUCH INFORMATION ONLY AS DIRECTED BY AND (4) UPON REQUEST TO RETURN ALL COPIES TO THE SINGER COMPANY. (SPI 3-39, Sec. 4.022)

THIS DATA GENERATED AT COMPANY EXPENSE UNDER APPROPRIATION/CONTRACT REFERENCE NUMBER 99-371 NOT TO BE RELEASED OUTSIDE OF THE COMPANY WITHOUT CLEARANCE BY SINGER-LINK DIVISION PATENT DEPARTMENT.

PARTS LIST

QTY REQD	CODE IDENT	PART OR IDENTIFYING NO	NOMENCLATURE OR DESCRIPTION

UNLESS OTHERWISE SPECIFIED DIMENSIONS ARE IN INCHES TOLERANCES ON DIMENSIONS 2 PLACE ± .03 ANGULAR ± 3 PLACE ± .010 FRACTIONAL

CONTRACT NO.

PREPARED BY R. TAYLOR DATE 5-25-70
CHECKED bill baleat 6-1-70
ENGR
MFR TO LINK STD
MATL/FNSH

LINK
SINGER-GENERAL

LOGIC
DISPLAY
REGIST

ZONE	LTR	DESCRIPTION
	–	RELEASE NO 05017-
	A	NO CHANGE REV
	B	REVISED PER ECN
	C	REVISED PER ECN

P11 → J3 OF CONTROL PANEL

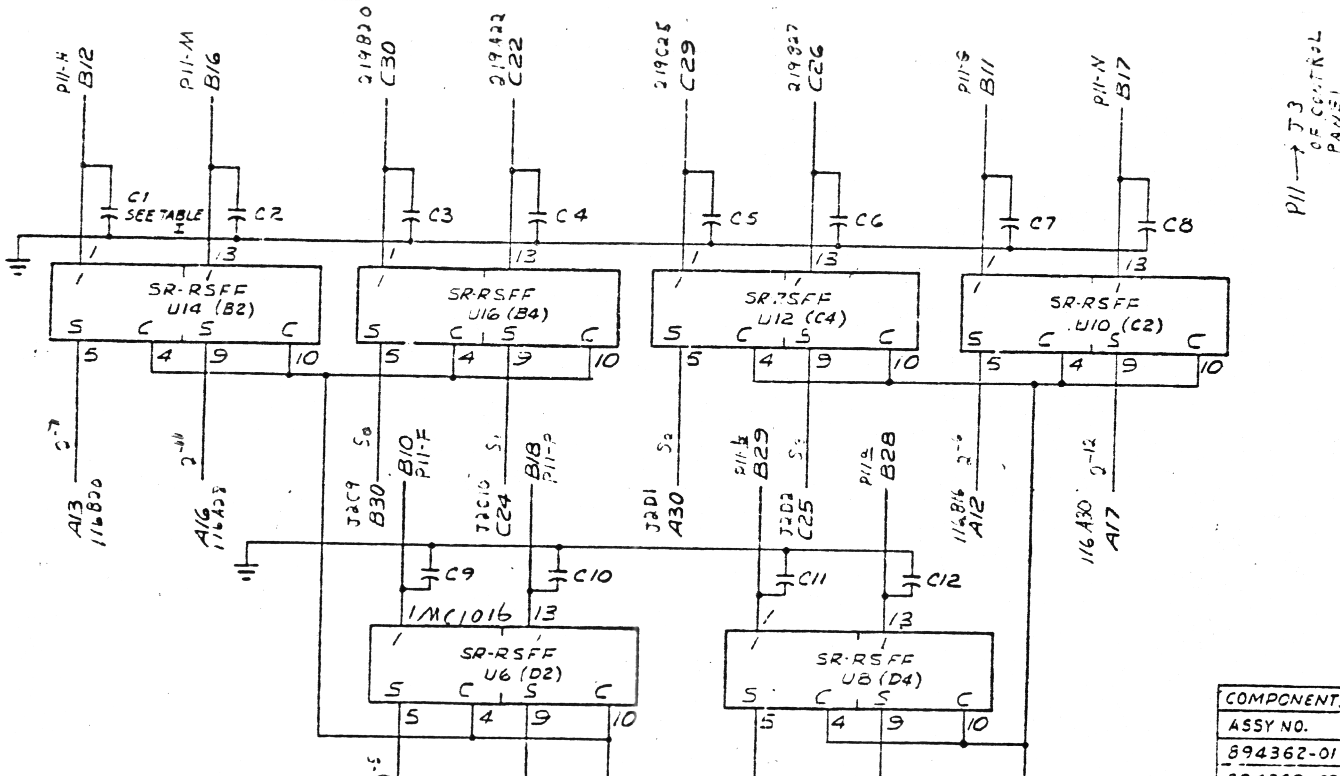

TABLE I

COMPONENTS NOT USED	
ASSY NO.	REF DESIGNATION
894362-01	C13 – C17
894362-02	C1 – C12, C18 – C37

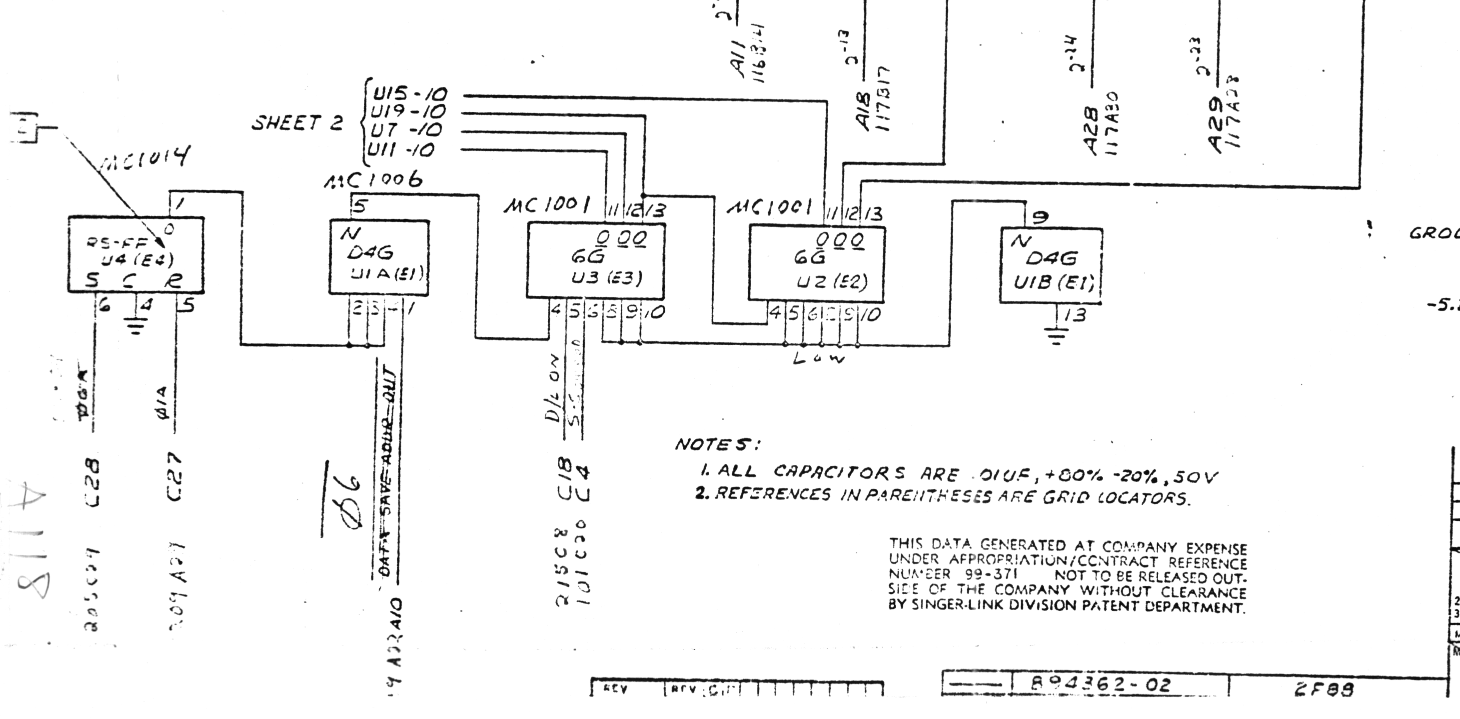

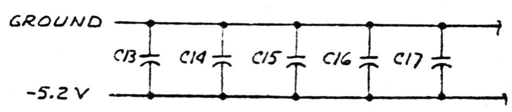

SEE TABLE I

ALL INFORMATION HEREON IS CONFIDENTIAL AND PROPERTY OF THE SINGER COMPANY. RECIPIENT TO DISCLOSE ANY OF SUCH INFORMATION TO OTHERS TO REPRODUCE THIS DOCUMENT IS WHOLE OR IN PART USE SUCH INFORMATION ONLY AS DIRECTED AND (4) UPON REQUEST TO RETURN TO THE SINGER COMPANY. (SPI 3-39, Sec. 4.022)

NOTES:
1. ALL CAPACITORS ARE .01UF, +80% -20%, 50V
2. REFERENCES IN PARENTHESES ARE GRID LOCATORS.

THIS DATA GENERATED AT COMPANY EXPENSE UNDER APPROPRIATION/CONTRACT REFERENCE NUMBER 99-371 NOT TO BE RELEASED OUTSIDE OF THE COMPANY WITHOUT CLEARANCE BY SINGER-LINK DIVISION PATENT DEPARTMENT.

PARTS LIST

QTY REQD	CODE IDENT	PART OR IDENTIFYING NO.	NOMENCLATURE DESCRIPTION

UNLESS OTHERWISE SPECIFIED DIMENSIONS ARE IN INCHES TOLERANCES ON DIMENSIONS 2 PLACE ± .03 ANGULAR ± 3 PLACE ± .010 FRACTIONAL

CONTRACT NO.

PREPARED BY R. TAYLOR DATE 5-25-70
CHECKED bill baleat 6-1-70
ENGR
MFR TO LINK STD
MATL/FNSH

SINGER

LOGIC
DISPLAY
R

REV | REV | 894362-02 | 2F88

Low when selected

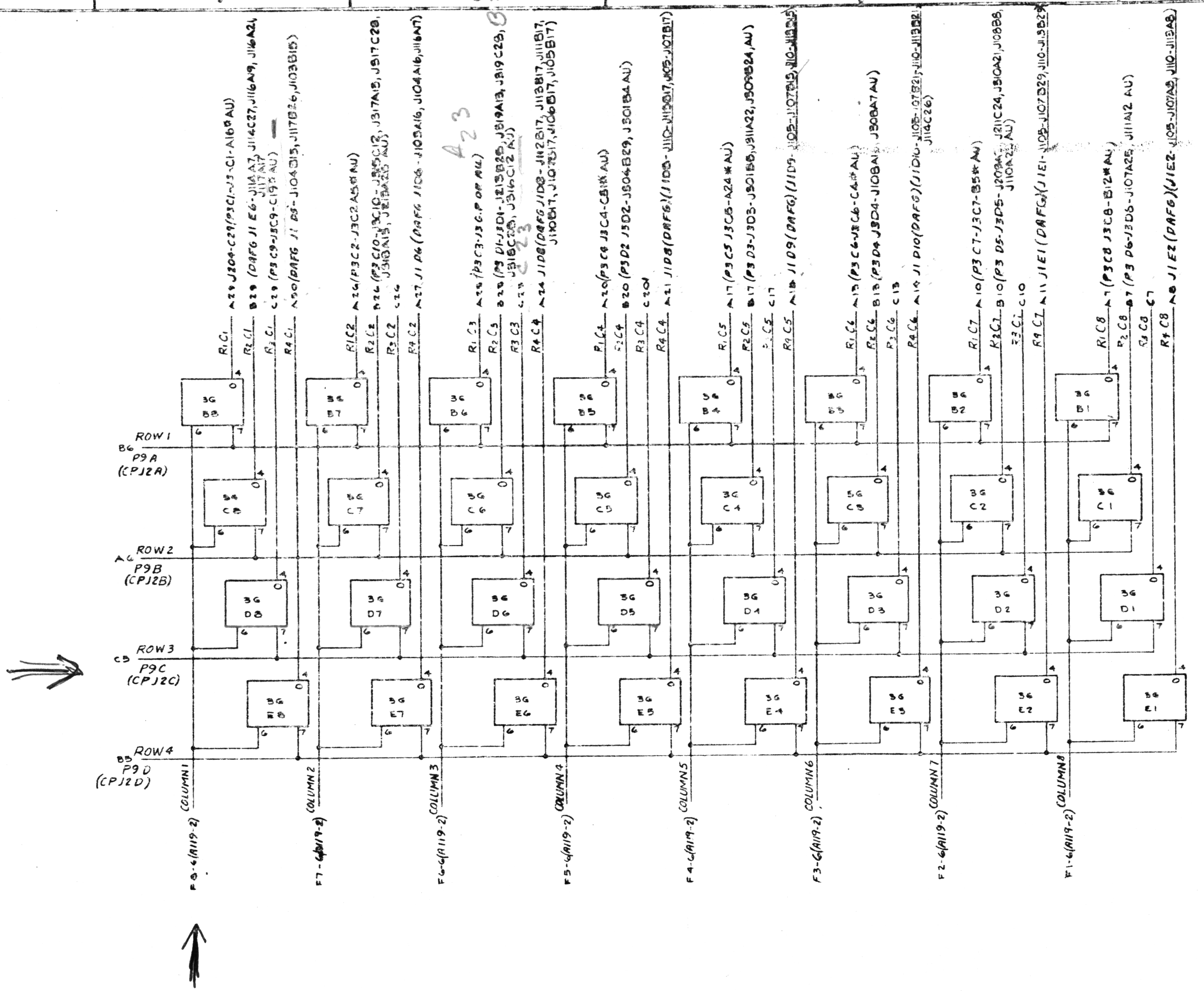

NOTES:
1. SS P9 ← CONTROL PANEL J2 (CPJ2).
2. MATRIX POSITIONS ON THIS DRAWING ARE EXACTLY THE SAME AS THE CONTROL PANEL MATRIX.
3. ✱ THIS P/N ON ALL BIT CARDS IN A.U.

A119-1

B688000E

LINK GROUP, SYSTEMS DIVISION
GENERAL PRECISION INC.
BINGHAMTON, NEW YORK

REGISTER DISPLAY

MATRIX DECODER

D 35878 B688000E

SCALE NONE SHEET 28

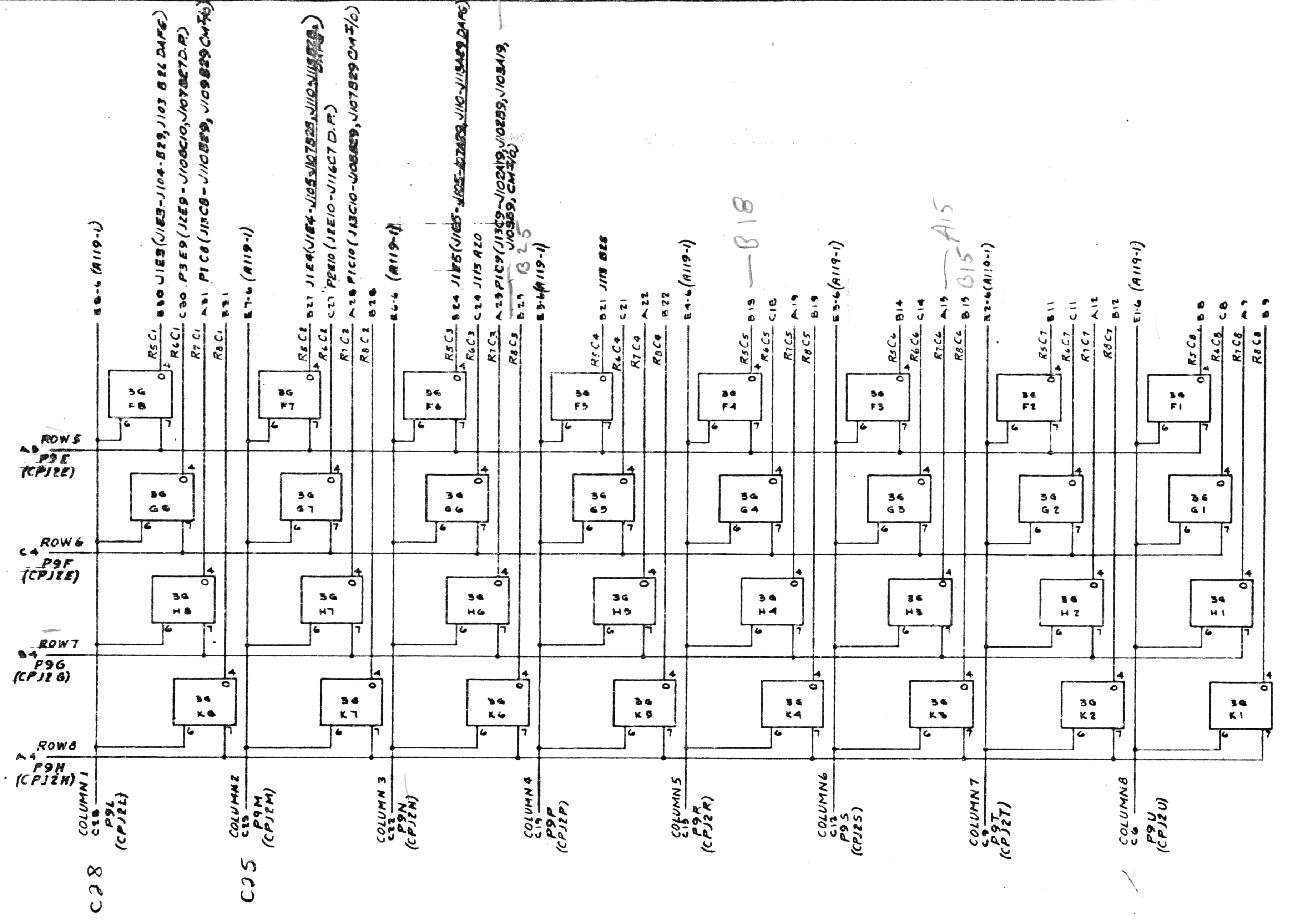

B688000E

A119-2

UNLESS OTHERWISE SPECIFIED DIMENSIONS ARE IN INCHES TOLERANCES ON DIMENSIONS
DECIMAL
2 PLACE ± .03 ANGULAR ±
3 PLACE ± .010 FRACTIONAL ±
HOLE DIA TOL PER SHOP STDS
MFR. TO LINK STDS

MATL

FINISH

NEXT ASSY | USED ON

DR 10-3-67
DR CHK 10-11-67
DESGN CHK 10-23-67
MFG. CHK
PROJ APPD 10/13/67

LINK GROUP, SYSTEMS DIVISION
GENERAL PRECISION, INC.
BINGHAMTON, NEW YORK

REGISTER DISPLAY MATRIX DECODER

SIZE	CODE IDENT NO.	DWG. NO.
D	36378	B688000E

SCALE NONE — SHEET 29

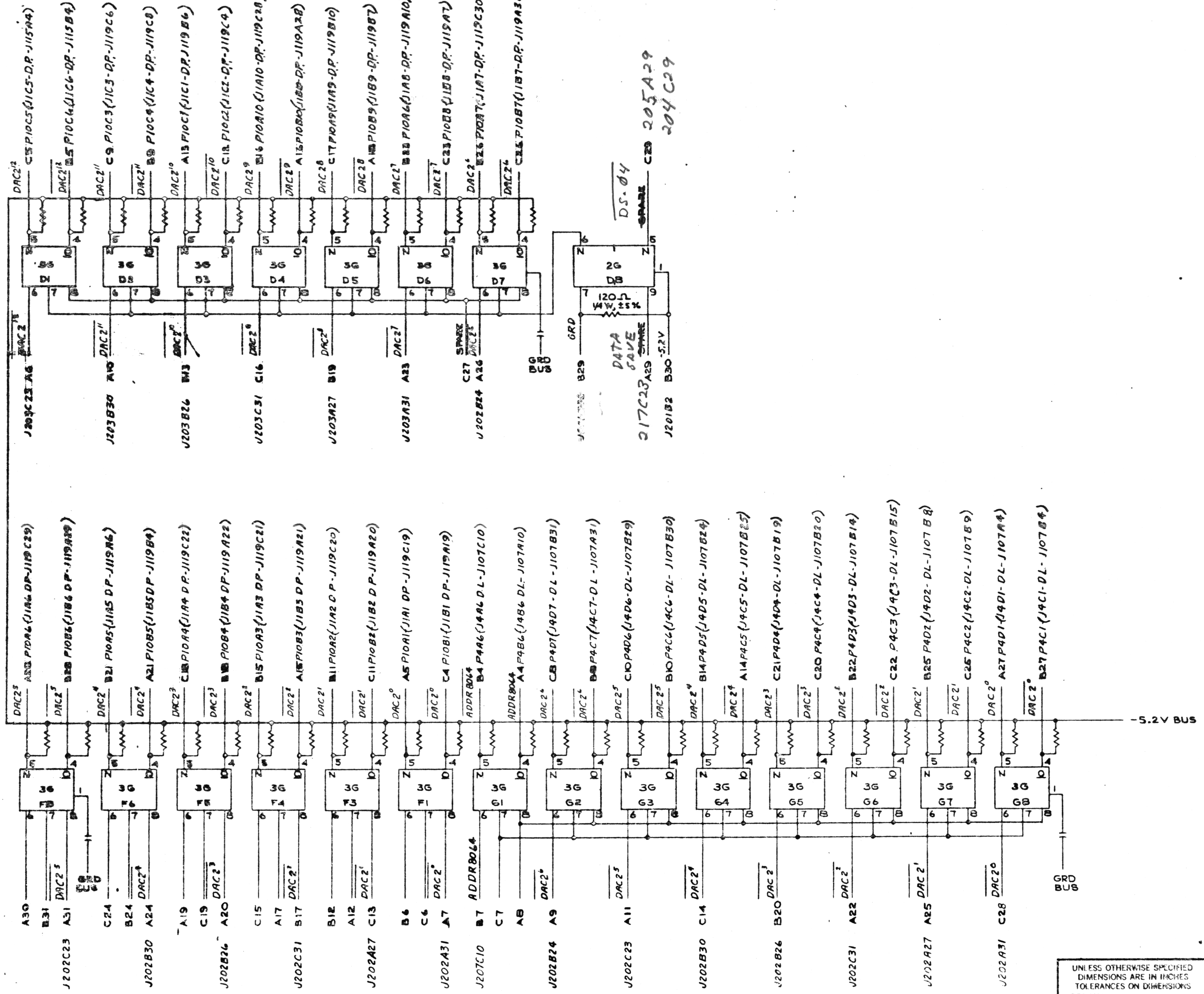

B688000E

A 201

UNLESS OTHERWISE SPECIFIED DIMENSIONS ARE IN INCHES TOLERANCES ON DIMENSIONS
DECIMAL
2 PLACE ± .03 ANGULAR ±
3 PLACE ± .010 FRACTIONAL ±
HOLE DIA. TOL. PER SHOP STDS.
MFR. TO LINK STDS.
MATL
FINISH

NEXT ASSY	USED ON

DR — 5-4-67
DR CHK — 10-19-67
DESGN CHK — 10-23-67
MFG. CHK
PROJ. APPD — 10/27/67

LINK GROUP, SYSTEMS DIVISION — GENERAL PRECISION, INC. — BINGHAMTON, NEW YORK

TWISTED PAIR DRIVERS

SIZE	CODE IDENT NO.	DWG. NO.
D	36378	B688000E

SCALE NONE

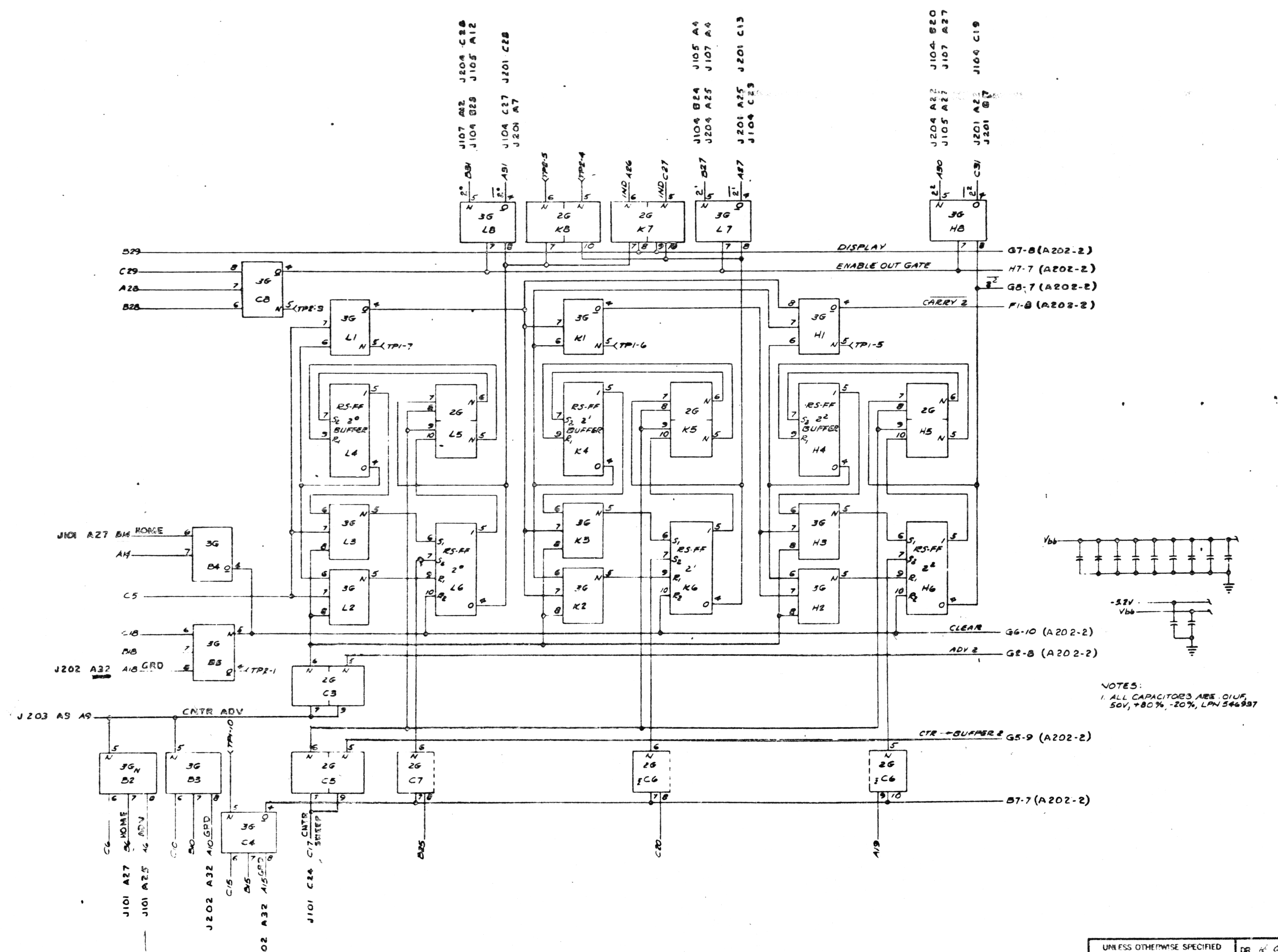

NOTES:
1. ALL CAPACITORS ARE .01UF, 50V, +80%, -20%, LPN 546937

B688000E

A202-1

UNLESS OTHERWISE SPECIFIED DIMENSIONS ARE IN INCHES TOLERANCES ON DIMENSIONS DECIMAL	
HOLE DIA TOL PER SHOP STDS	
MFR TO LINK STDS	
MATL	
FINISH	
687274 NEXT ASSY	AIF 370-T9 USED ON

DR 10-2-67
DR CHK 10-10-67
DESIGN CHK 10-23-67
MFG CHK
PROJ APPD 10/23/67

LINK GROUP, SYSTEMS DIVISION
GENERAL PRECISION, INC.
BINGHAMTON, NEW YORK

LOGIC DIAGRAM
DRUM ADDRESS COUNTER

SIZE	CODE IDENT NO.	DWG. NO.
D	36378	B688000E

SCALE NONE

8 7 6 5 4 3 2 1

ZONE	LTR	DESCRIPTION	DATE	APPROVED

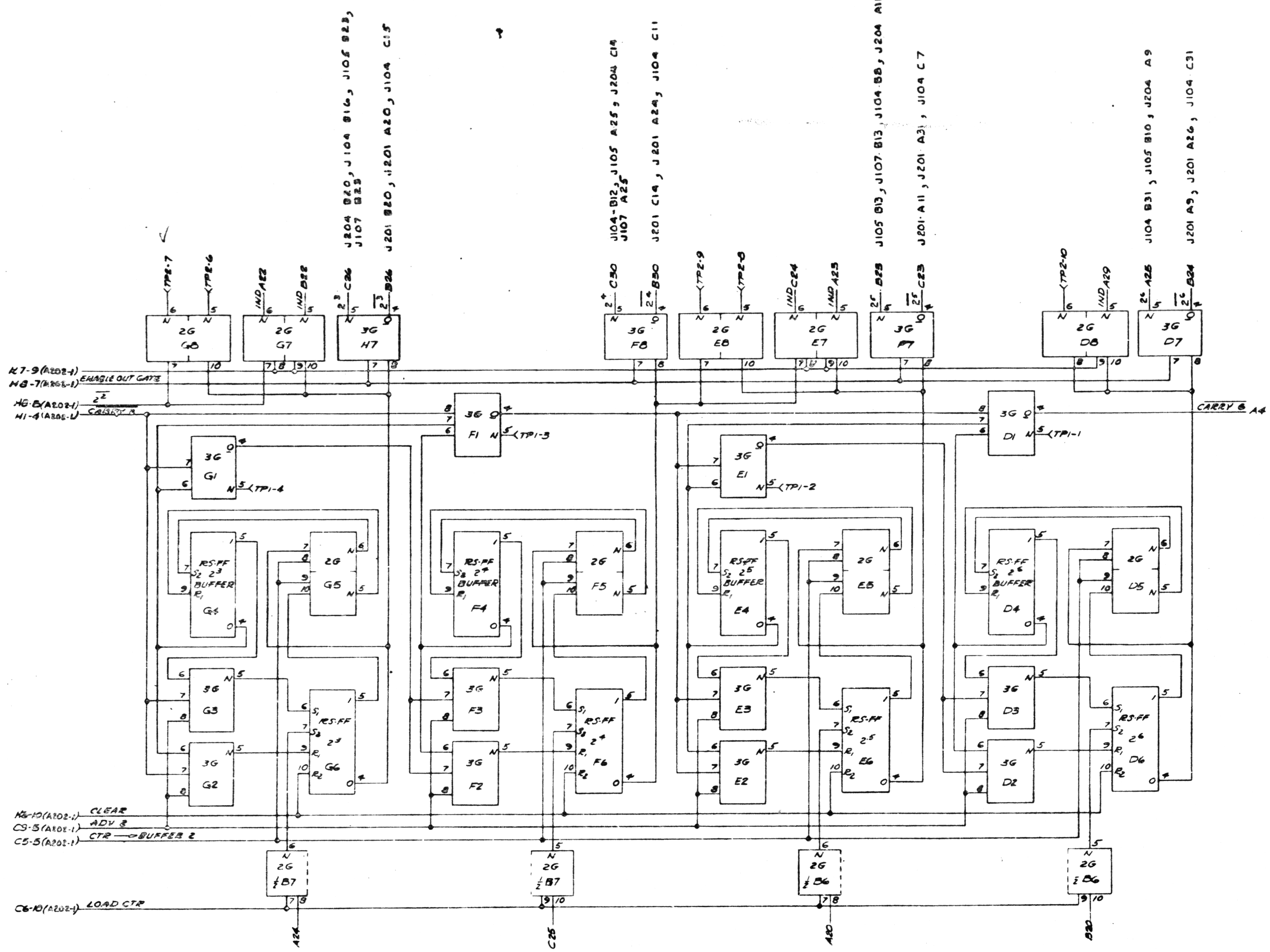

B688000E

A202-2

UNLESS OTHERWISE SPECIFIED DIMENSIONS ARE IN INCHES TOLERANCES ON DIMENSIONS
DECIMAL
2 PLACE ±.03 ANGULAR
3 PLACE ±.010 FRACTIONAL
HOLE DIA TOL PER SHOP STDS
MFR TO LINK STDS
MATL
FINISH

DR 10-2-67
DR CHK 10-14-67
DESGN CHK 10-23-67
MFG CHK
PROJ APPD 10/23/67

LINK GENERAL PRECISION, INC.

LOGIC DIAGRAM
DRUM ADDRESS COUNTER

SIZE	CODE IDENT NO	DWG NO
D	36378	B688000E

SCALE NONE

687274	AIF 37U-T9
NEXT ASSY	USED ON

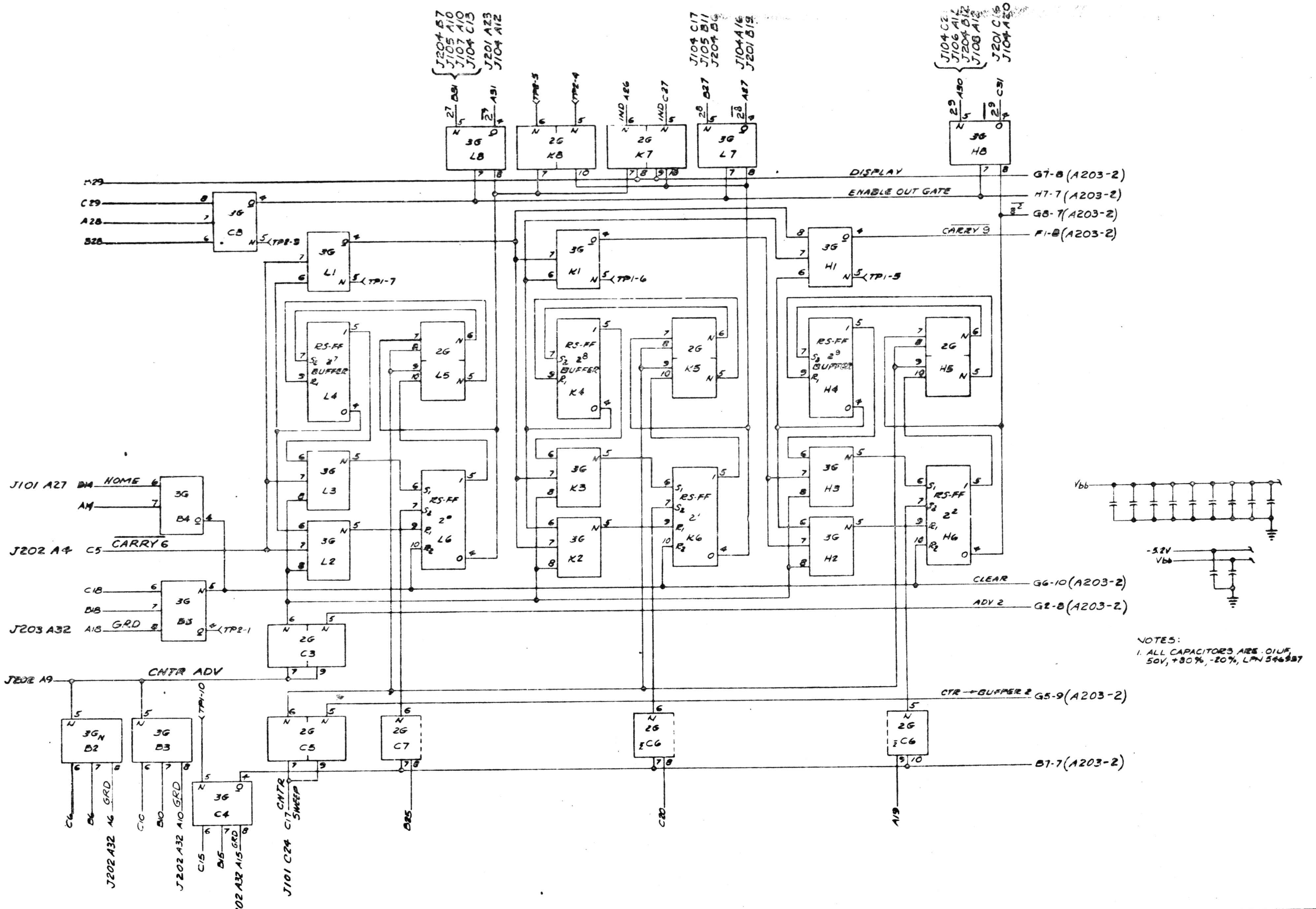

503274E

B688000E

A203-1

UNLESS OTHERWISE SPECIFIED DIMENSIONS ARE IN INCHES TOLERANCES ON DIMENSIONS DECIMAL 2 PLACE ± .03 ANGULAR ± 3 PLACE ± .010 FRACTIONAL ± HOLE DIA TOL PER SHOP STDS	
MFR TO LINK STDS	
MATL	
FINISH	

NEXT ASSY	USED ON
687274	A/F37U-T9

DR 10-3-67
DR CHK 10-10-67
DESGN CHK 10-23-67
MFG CHK
PROJ APPD 10/23/67

LINK GROUP, SYSTEMS DIVISION
GENERAL PRECISION, INC.
BINGHAMTON, NEW YORK

DRUM ADDRESS COUNTER

SIZE	CODE IDENT NO.	DWG. NO.
D	36378	B688000E

SCALE NONE SHEET 33

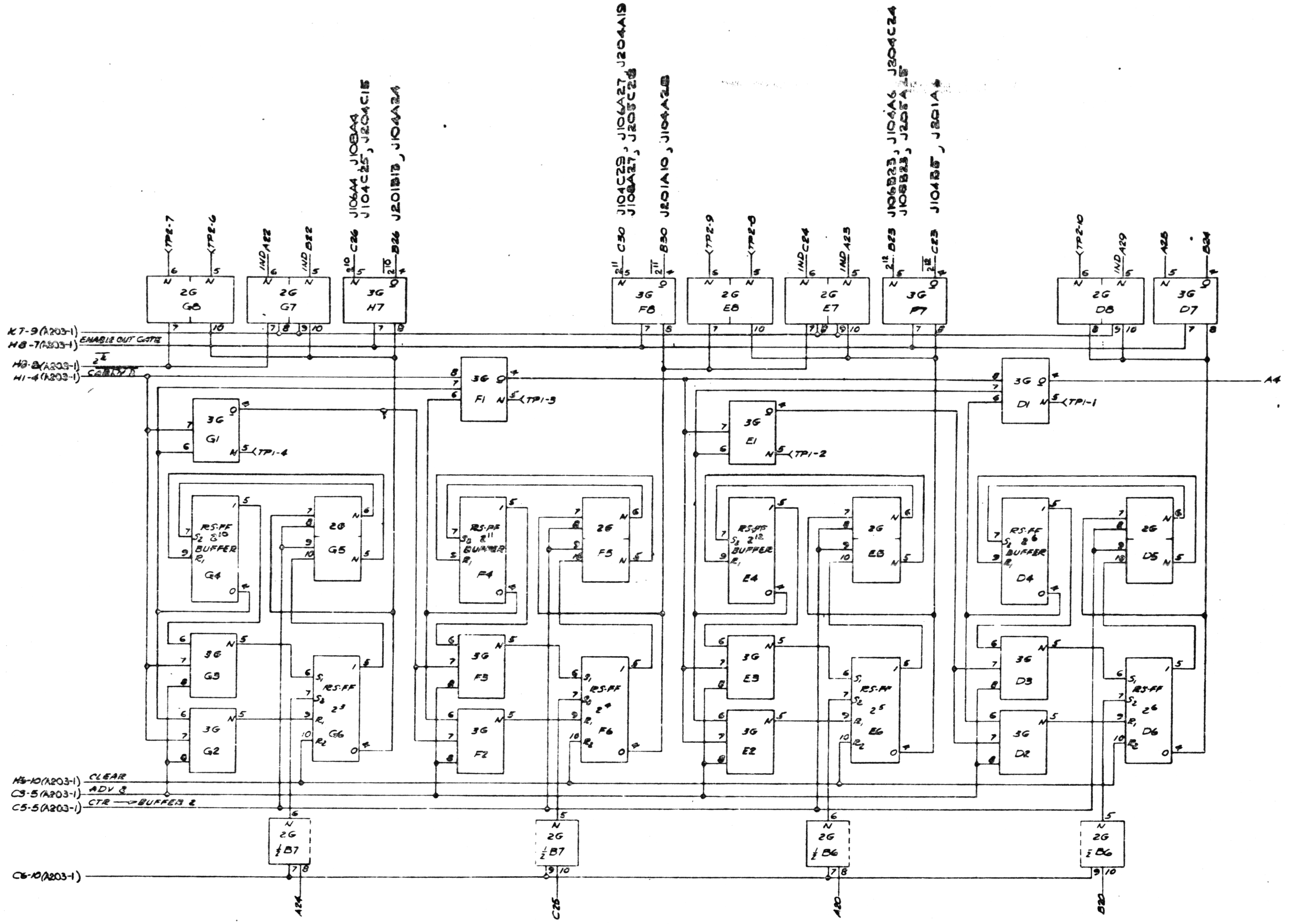

A203-2

UNLESS OTHERWISE SPECIFIED DIMENSIONS ARE IN INCHES TOLERANCES ON DIMENSIONS DECIMAL 2 PLACE ± .03 ANGULAR ± 3 PLACE ± .010 FRACTIONAL ± HOLE DIA TOL PER SHOP STDS	DR 10-3-67 DR CHK 10-14-67 DESGN CHK 10-23-67 MFG. CHK PROJ. APPD 10/23/67
MFR TO LINK STDS.	
MATL	
FINISH	

NEXT ASSY	USED ON
683724	N1370 FD

LINK GROUP, SYSTEMS DIVISION
GENERAL PRECISION, INC.
BINGHAMTON, NEW YORK

DRUM ADDRESS COUNTER

SIZE	CODE IDENT NO.	DWG. NO.
D	36378	B688000E

SCALE NONE SHEET 34

ZONE	LTR	REVISIONS DESCRIPTION	DATE	APPROVED

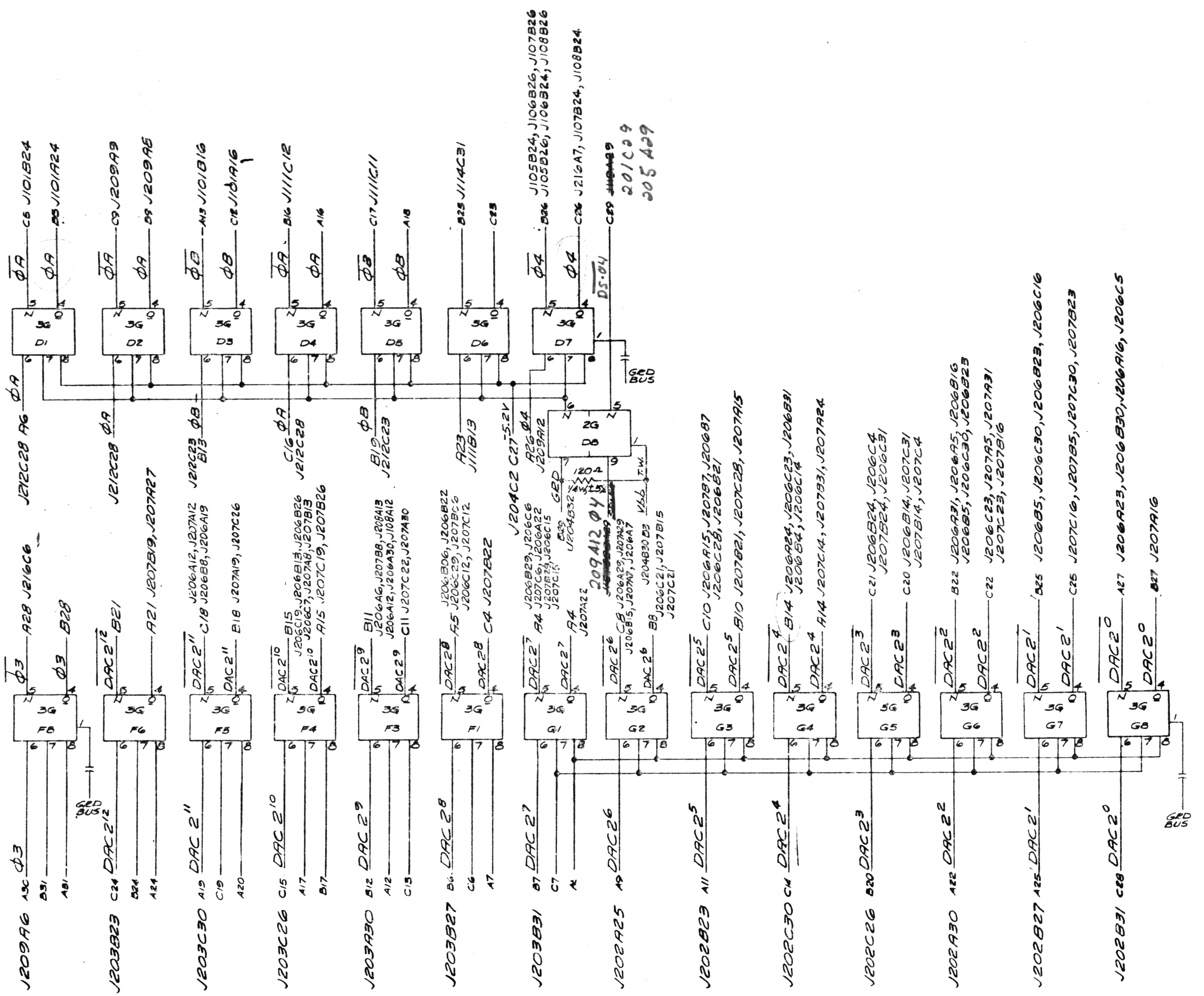

B688000E

A

NOTES: UNLESS OTHERWISE SPECIFIED
1. ALL CAPACITORS ARE .01UF, 50V, +80%-20% LPN 546937.

A204

C6875/C	A/F370-T9
NEXT ASSY	USED ON

UNLESS OTHERWISE SPECIFIED DIMENSIONS ARE IN INCHES TOLERANCES ON DIMENSIONS
DECIMAL
2 PLACE ± .03 ANGULAR ±
3 PLACE ± .010 FRACTIONAL ±
HOLE DIA. TOL. PER STD STDS
MFR. TO LINK STDS.
MATL
FINISH

DR 4-10-67
DR CHK 11-14-67
DESGN CHK
MFG. CHK
PROJ APPD 11/22/67

LINK GENERAL PRECISION, INC
LINK GROUP, SYSTEMS DIVISION
BINGHAMTON, NEW YORK

LOGIC DIAGRAM-
LINE DRIVERS

SIZE	CODE IDENT NO.	DWG. NO.
D	36378	B688000E

SCALE NONE SHEET 35

ZONE	LTR	REVISIONS DESCRIPTION	DATE	APPROVED

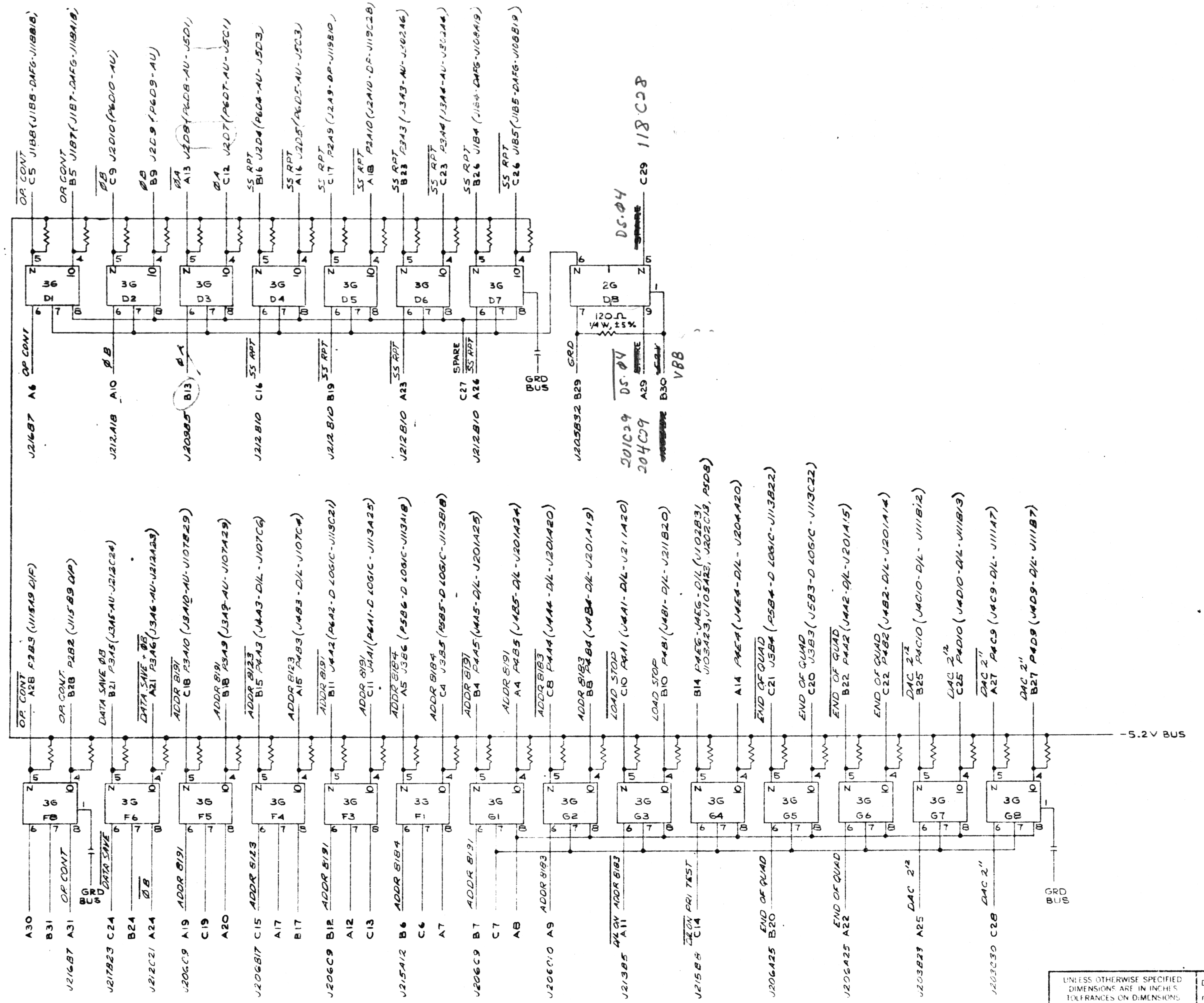

B688000E

A205

UNLESS OTHERWISE SPECIFIED
DIMENSIONS ARE IN INCHES
TOLERANCES ON DIMENSIONS
DECIMAL
2 PLACE ± .03 ANGULAR
3 PLACE ± .010 FRACTIONAL
HOLE DIA. TOL PER SHOP STDS
MFR. TO LINK STDS
MATL
FINISH

DR
DR CHK
DESGN CHK
MFG. CHK
PROJ. APPD

NEXT ASSY | USED ON

LINK GROUP, SYSTEMS DIVISION
LINK GENERAL PRECISION, INC.
BINGHAMTON, NEW YORK

LOGIC DIAGRAM
TWISTED PAIR DRIVERS

SIZE	CODE IDENT NO	DWG NO
D	36378	B688000E

SCALE | SHEET 36

ZONE	LTR	REVISIONS DESCRIPTION	DATE	APPROVED

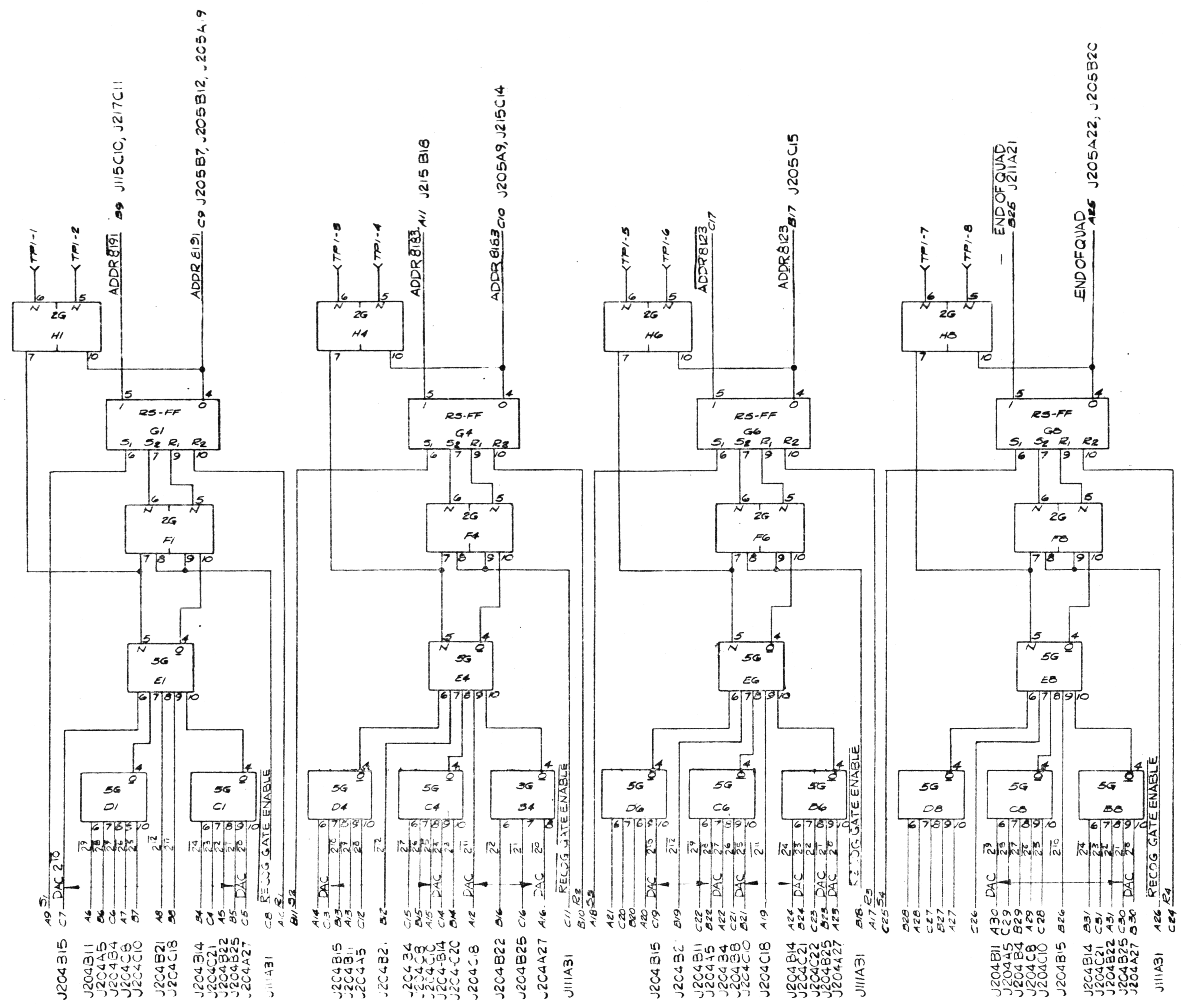

B688000E

A206

UNLESS OTHERWISE SPECIFIED
DIMENSIONS ARE IN INCHES
TOLERANCES ON DIMENSIONS
DECIMAL
2 PLACE ± .03 ANGULAR ±
3 PLACE ± .010 FRACTIONAL ±
HOLE DIA. TOL. PER SHOP STDS

MFR. TO LINK STDS

MATL

FINISH

NEXT ASSY | USED ON

DR

DR CHK

DESGN CHK

MFG. CHK

PROJ. APPD

LINK GROUP SYSTEMS DIVISION
GENERAL PRECISION, INC
BINGHAMTON, NEW YORK

LOGIC DIAGRAM - ADDRESS RECOGNITION GATES

SIZE	CODE IDENT NO	DWG. NO
D	36378	B688000E

SCALE | SHEET 37

ZONE	LTR	REVISIONS DESCRIPTION	DATE	APPROVED

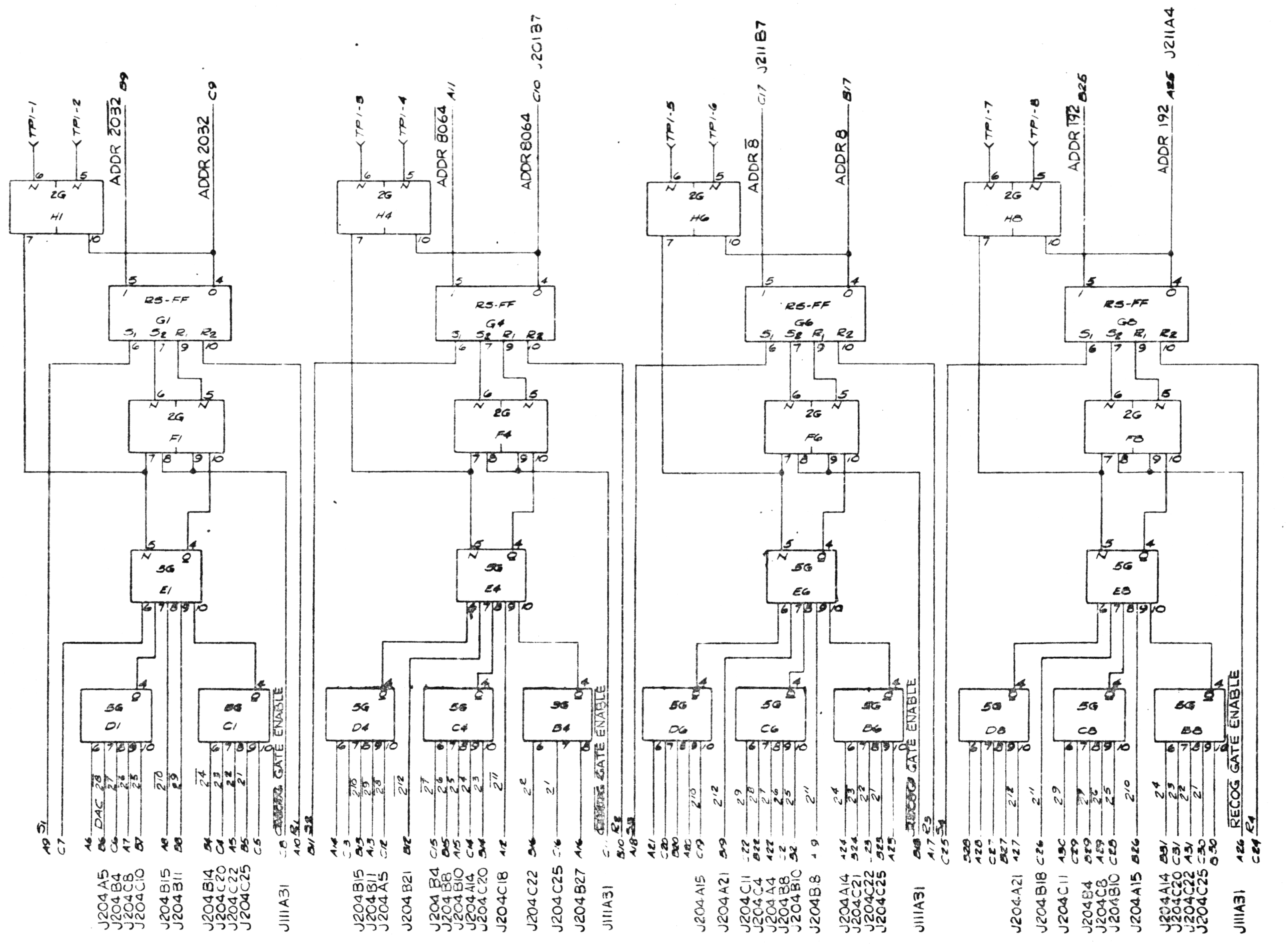

B688000E

A

A207

UNLESS OTHERWISE SPECIFIED DIMENSIONS ARE IN INCHES TOLERANCES ON DIMENSIONS DECIMAL
2 PLACE ± .03 ANGULAR ±
3 PLACE ± .010 FRACTIONAL ±
HOLE DIA TOL PER SHOP STDS
MFR TO LINK STDS
MATL
FINISH

DR James C Brown 9-3-67
DR CHK 10-16-67
DESGN CHK 10-3-67
MFG CHK
PROJ APPD 10/17/67

LINK GENERAL PRECISION, INC.
LINK GROUP, SYSTEMS DIVISION
BINGHAMTON, NEW YORK

LOGIC DIAGRAM-
ADDRESS RECOGNITION
GATES

SIZE	CODE IDENT NO.	DWG. NO.
D	36378	B688000E

SCALE NONE   SHEET 38

687526	A/F37U-T9
NEXT ASSY	USED ON

REVISIONS				
ZONE	LTR	DESCRIPTION	DATE	APPROVED

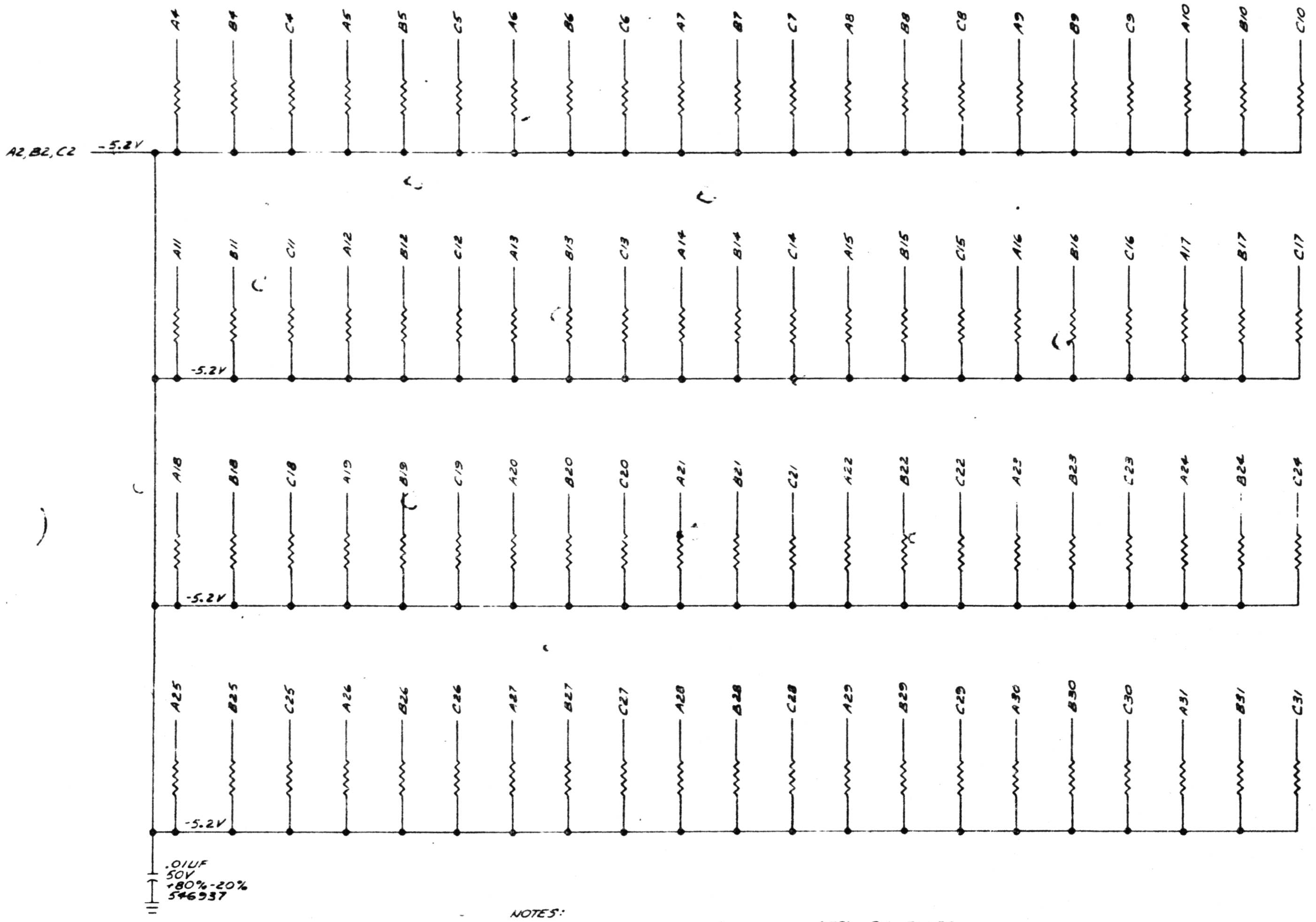

NOTES:
1. ALL RESISTORS ARE 2.2K, 1/4W, ±5%, LPN #52057
2. FOR REFERENCE ONLY. REFER TO W/L 688102 FOR INTERCONNECTIONS.

B688000E

NEXT ASSY	USED ON
B688648	A/F37U-T9

UNLESS OTHERWISE SPECIFIED DIMENSIONS ARE IN INCHES TOLERANCES ON DIMENSIONS
DECIMAL
~~2 PLACE ± .03 ANGULAR ±~~
~~3 PLACE ± .010 FRACTIONAL ±~~
~~HOLE DIA. TOL. PER SHOP STDS.~~
MFR. TO LINK STDS.
MATL
FINISH

DR K. Harrington 2-12-68
DR CHK G.J. Anderson 2/12/68
DESGN CHK [signature] 2/12/68
MFG. CHK
PROJ. APPD G.J. Anderson 2/12/68

LINK — GENERAL PRECISION, INC.
LINK GROUP, SYSTEMS DIVISION
BINGHAMTON, NEW YORK

LOGIC DIAGRAM-
PULSE SHAPING

SIZE	CODE IDENT NO.	DWG. NO.
D	36378	B688000E

SCALE NONE SHEET 59

ZONE	LTR	REVISIONS DESCRIPTION	DATE	APPROVED

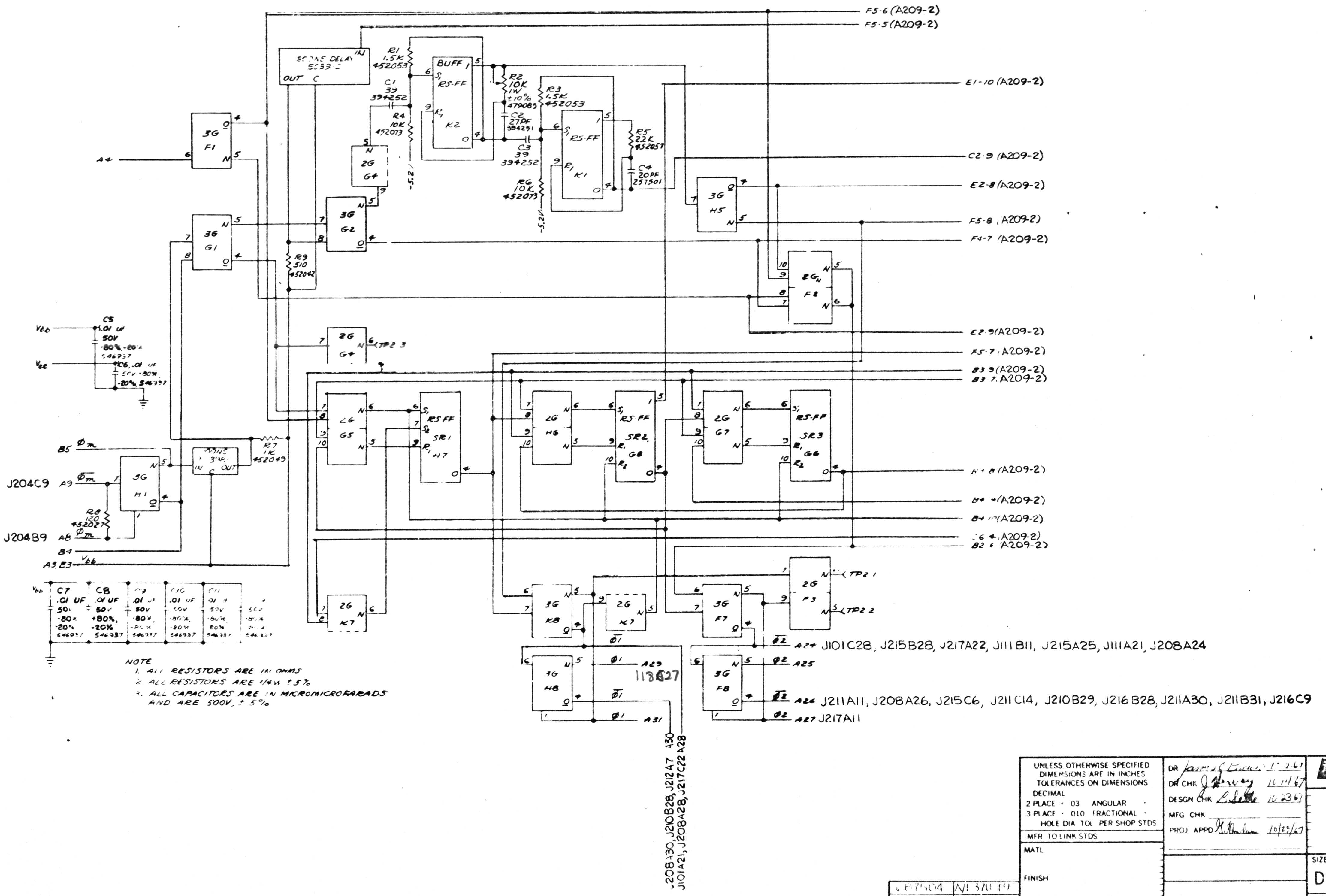

B688000E

A209-1

UNLESS OTHERWISE SPECIFIED DIMENSIONS ARE IN INCHES TOLERANCES ON DIMENSIONS DECIMAL 2 PLACE · .03 ANGULAR · 3 PLACE · .010 FRACTIONAL · HOLE DIA TOL PER SHOP STDS	DR	10-12-67	LINK GROUP, SYSTEMS DIVISION GENERAL PRECISION, INC BINGHAMTON, NEW YORK
MFR TO LINK STDS	DR CHK	10-14-67	LOGIC DIAGRAM— SINGLE STEP PHASE GENERATOR
MATL	DESGN CHK	10-23-67	
FINISH	MFG CHK		
	PROJ APPD	10/27/67	

NEXT ASSY	USED ON
687504	NE37019

SIZE	CODE IDENT NO	DWG NO
D	36378	B688000E

SCALE NONE — SHEET 40

ZONE	LTR	REVISIONS DESCRIPTION	DATE	APPROVED

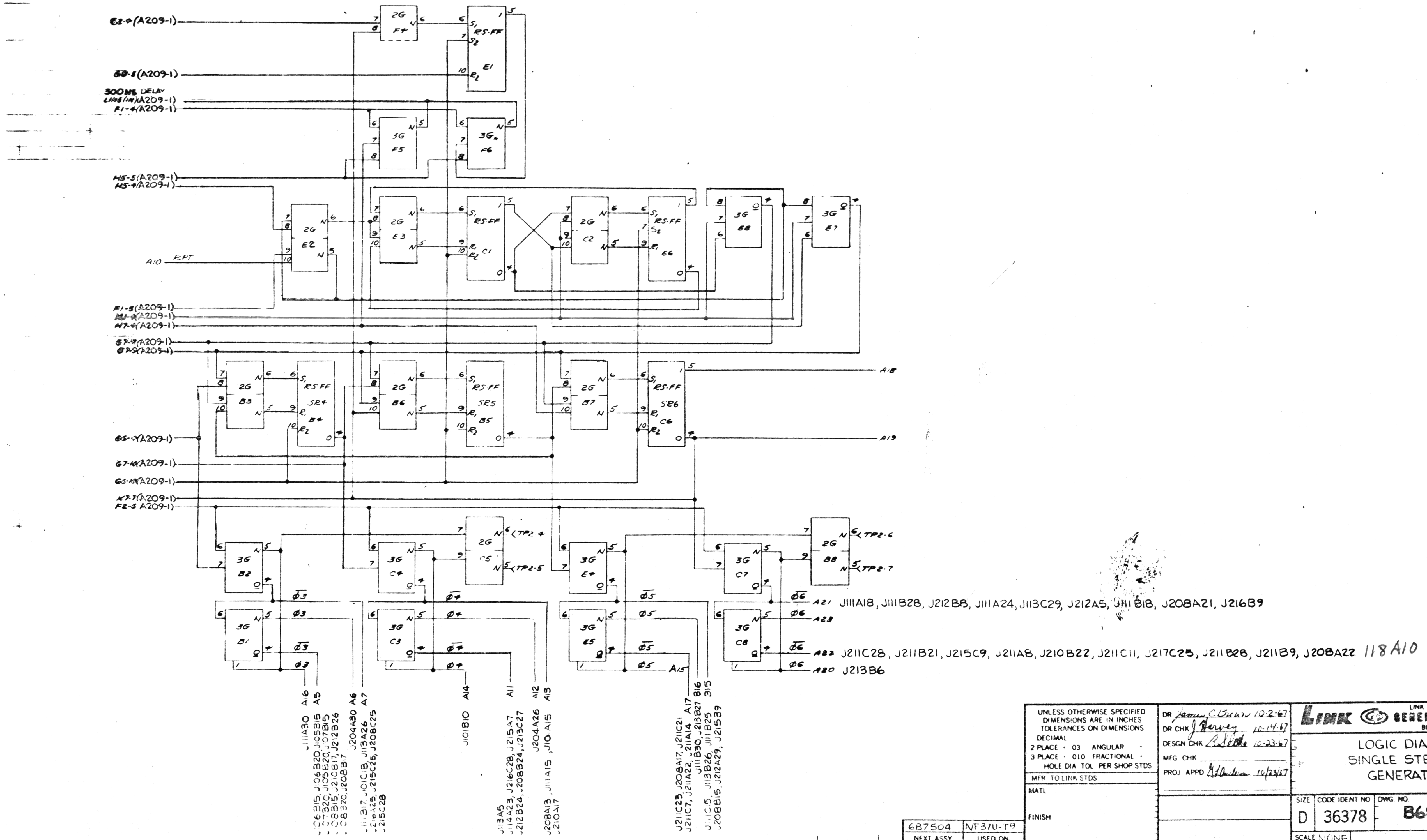

A209-2

B688000E

UNLESS OTHERWISE SPECIFIED DIMENSIONS ARE IN INCHES TOLERANCES ON DIMENSIONS DECIMAL 2 PLACE .03 ANGULAR 3 PLACE .010 FRACTIONAL HOLE DIA TOL PER SHOP STDS	DR James C. Bauer 10-2-67 DR CHK J. Harvey 10-14-67 DESGN CHK 10-23-67 MFG CHK PROJ APPD 10/23/67	LINK GROUP, SYSTEMS DIVISION GENERAL PRECISION, INC BINGHAMTON, NEW YORK LOGIC DIAGRAM— SINGLE STEP PHASE GENERATOR
MFR TO LINK STDS		
MATL		SIZE D · CODE IDENT NO 36378 · DWG NO B688000E
FINISH		SCALE NONE · SHEET 41

687504	NF370-T9
NEXT ASSY	USED ON

8 | 7 | 6 | 5 | 4 | 3 | 2 | 1

ZONE	LTR	REVISIONS DESCRIPTION	DATE	APPROVED

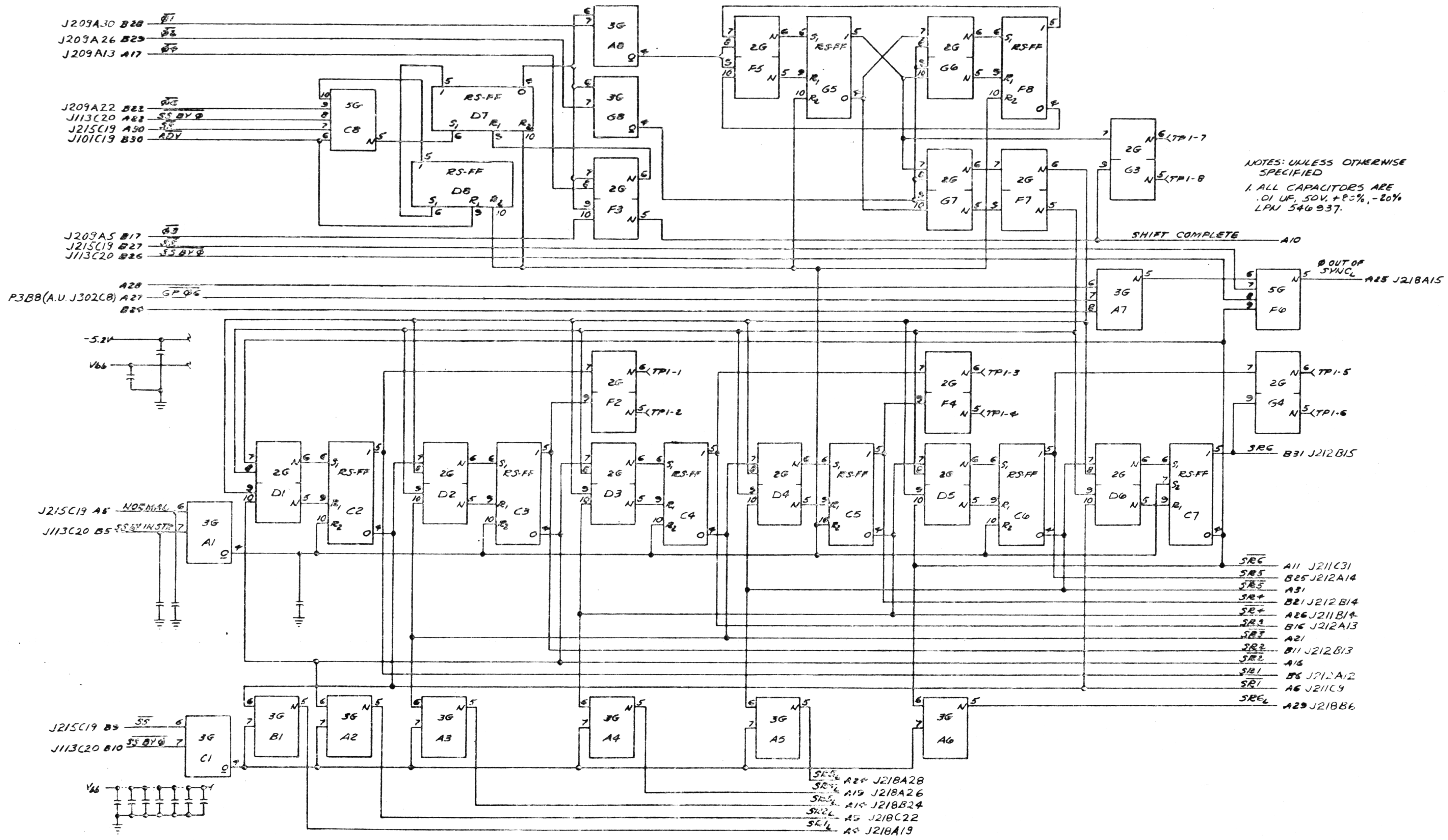

NOTES: UNLESS OTHERWISE SPECIFIED

1. ALL CAPACITORS ARE .01 UF, 50V, +80%, -20% LPN 546937.

D | C | B | A

B688000E

A210

UNLESS OTHERWISE SPECIFIED DIMENSIONS ARE IN INCHES. TOLERANCES ON DIMENSIONS DECIMAL 2 PLACE ± .03 ANGULAR ± 3 PLACE ± .010 FRACTIONAL ± HOLE DIA. TOL. PER SHOP STDS

FIN. TO LINKS STDS.

MAT'L

FINISH

687300	A1F310-T9
NEXT ASSY	USED ON

DR. L. Romano 10-2-67

DR. CHK. 12-14-67

DESIGN CHK. 12-15-67

MFG. CHK.

PROJ. APPD.

LINK GROUP, SYSTEMS DIVISION GENERAL PRECISION, INC. BINGHAMTON, NEW YORK

LOGIC DIAGRAM— S/S BY Φ SHIFT REGISTER

SIZE D | CODE IDENT NO. 80378 | DWG. NO. B688000E

SCALE NONE | SHEET 42

ZONE	LTR	REVISIONS DESCRIPTION	DATE	APPROVED

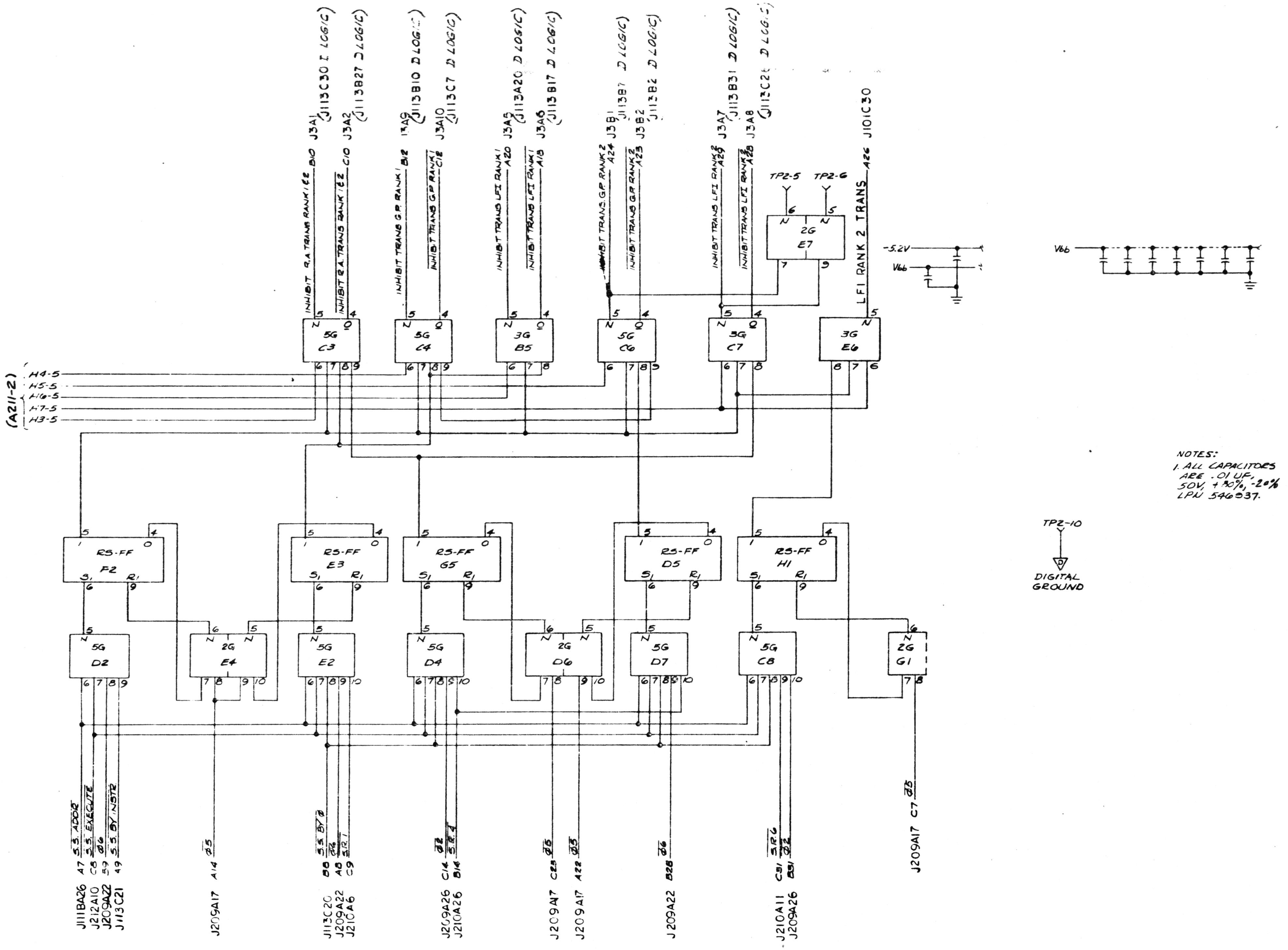

B688000E

A211-1

UNLESS OTHERWISE SPECIFIED DIMENSIONS ARE IN INCHES TOLERANCES ON DIMENSIONS DECIMAL
2 PLACE ± .03 ANGULAR ±
3 PLACE ± .010 FRACTIONAL ±
HOLE DIA. TOL. PER SHOP STDS
MFR. TO LINK STDS.
MATL
FINISH

687506	A/F 370-T9
NEXT ASSY	USED ON

DR.
DR CHK
DESGN CHK
MFG. CHK
PROJ. APPD

LINK GROUP, SYSTEMS DIVISION
GENERAL PRECISION, INC.
BINGHAMTON, NEW YORK

LOGIC DIAGRAM
INSTRUCTION TRANSFER
CONTROL

SIZE	CODE IDENT NO.	DWG. NO.
D	36378	B688000E

SCALE NONE | SHEET 43

REVISIONS				
ZONE	LTR	DESCRIPTION	DATE	APPROVED

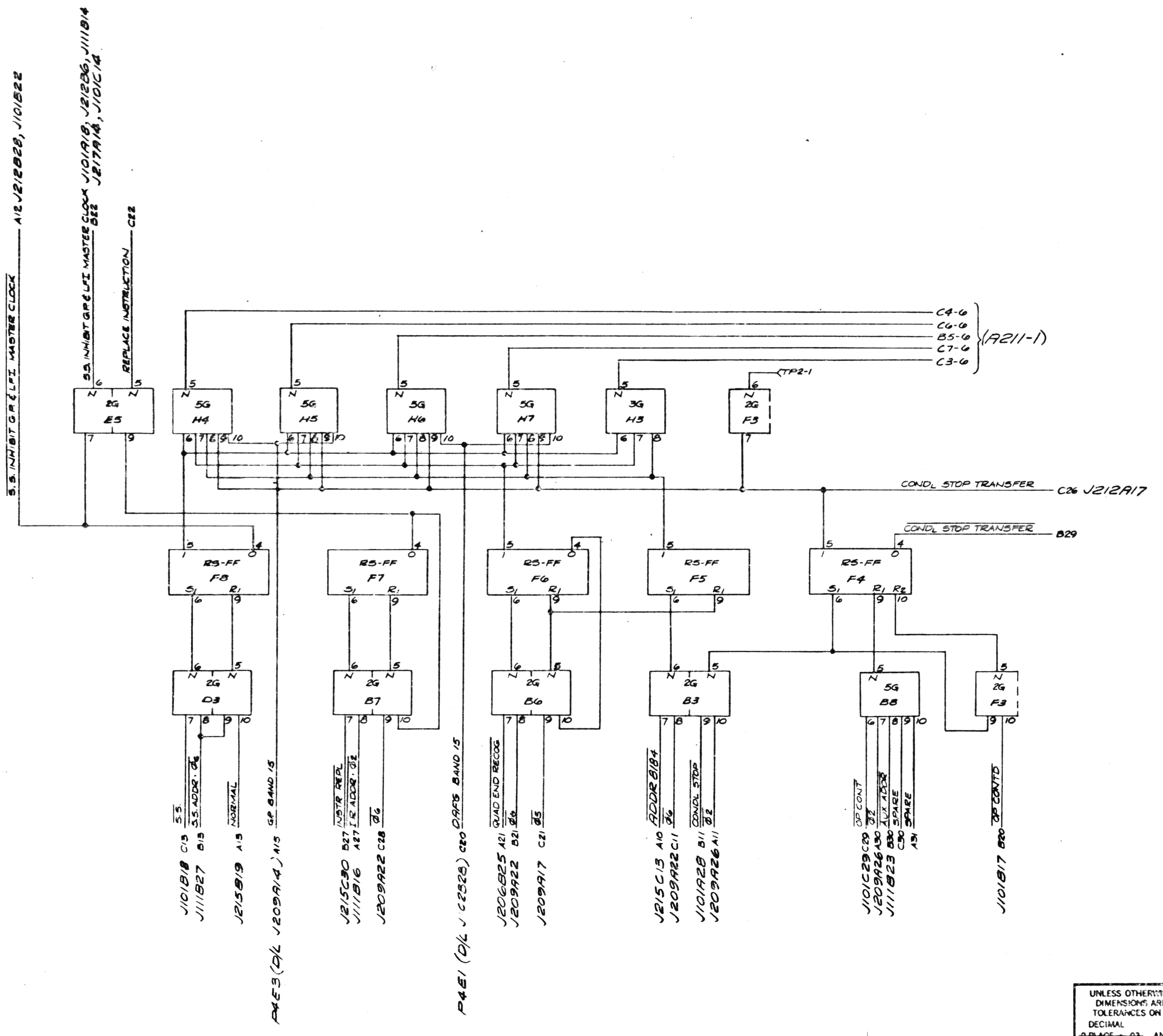

B688000E

A

A211-2

UNLESS OTHERWISE SPECIFIED DIMENSIONS ARE IN INCHES TOLERANCES ON DIMENSIONS DECIMAL 2 PLACE ± .03 ANGULAR ± 3 PLACE ± .010 FRACTIONAL ± HOLE DIA. TOL. PER SHOP STDS.	DR J. Beyland 10-3-67	LINK GROUP, SYSTEMS DIVISION GENERAL PRECISION, INC. BINGHAMTON, NEW YORK
MFR. TO LINK STDS.	DR CHK 11-14-67	LOGIC DIAGRAM - INSTRUCTION TRANSFER CONTROL
MATL	DESGN CHK	
FINISH	MFG. CHK	
	PROJ. APPD 11/23/67	

NEXT ASSY	USED ON
687508	A/F311 T9

SIZE	CODE IDENT NO.	DWG. NO.
D	36378	B688000E

SCALE NONE

SHEET 44

FORM NO F 1074 00

8	7	6	5	4	3	2	11

REVISIONS				
ZONE	LTR	DESCRIPTION	DATE	APPROVED

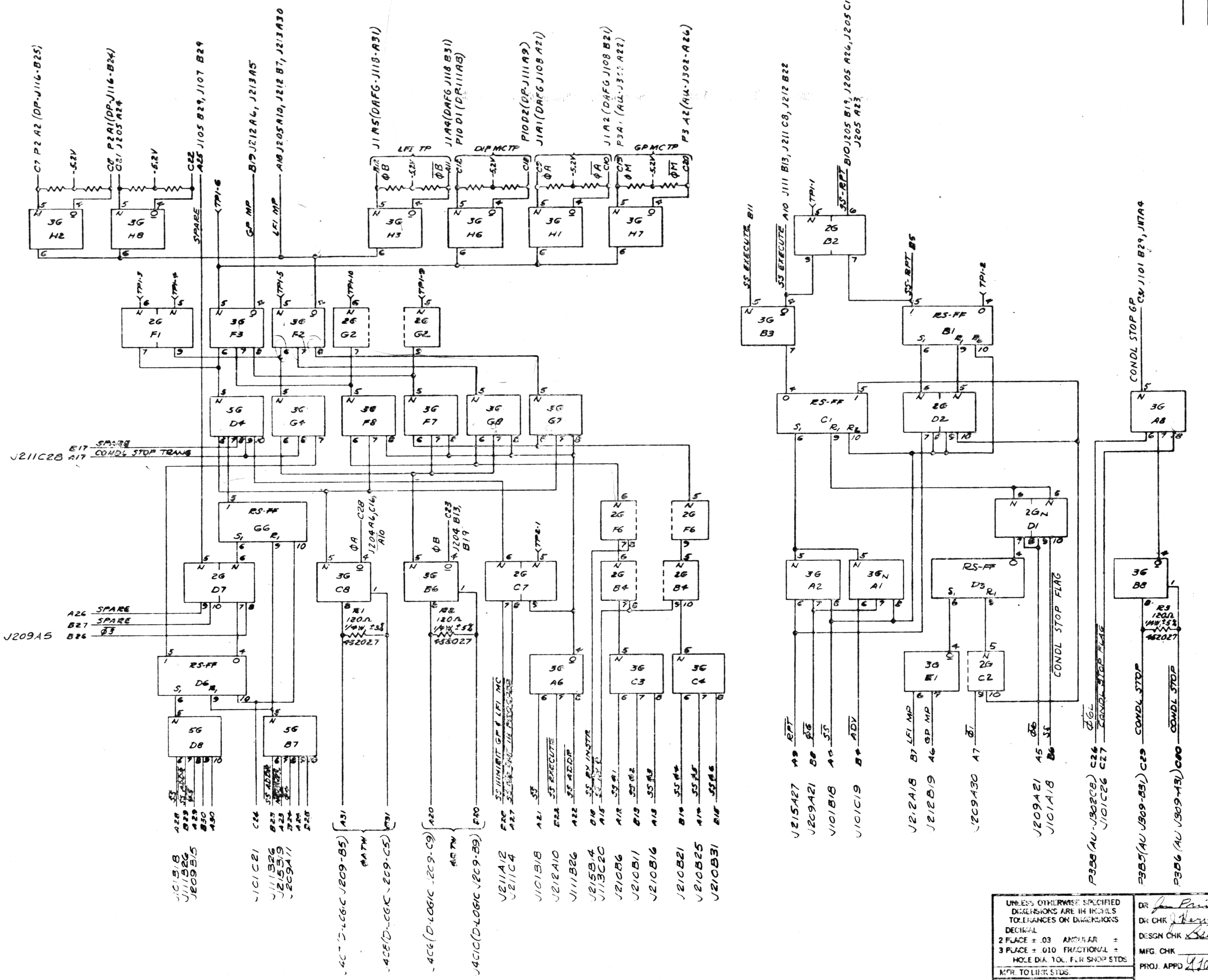

B688000E

A

UNLESS OTHERWISE SPECIFIED DIMENSIONS ARE IN INCHES TOLERANCES ON DIMENSIONS DECIMAL 2 PLACE ± .03 ANGULAR ± 3 PLACE ± .010 FRACTIONAL ± HOLE DIA. TOL. PER SHOP STDS	DR. [signature] 10-3-67
MFR. TO LINK STDS.	DR CHK [signature] 6-4-67
MATL	DESGN CHK [signature] 10-23-67
FINISH	MFG. CHK
	PROJ. APPD [signature] 10/23/67

LINK GENERAL PRECISION, INC. LINK GROUP, SYSTEMS DIVISION BINGHAMTON, NEW YORK

MASTER PULSE GENERATOR AND SINGLE STEP CONTROL

SIZE	CODE IDENT NO	DWG. NO.
D	36378	B688000E

SCALE NONE

SHEET 45

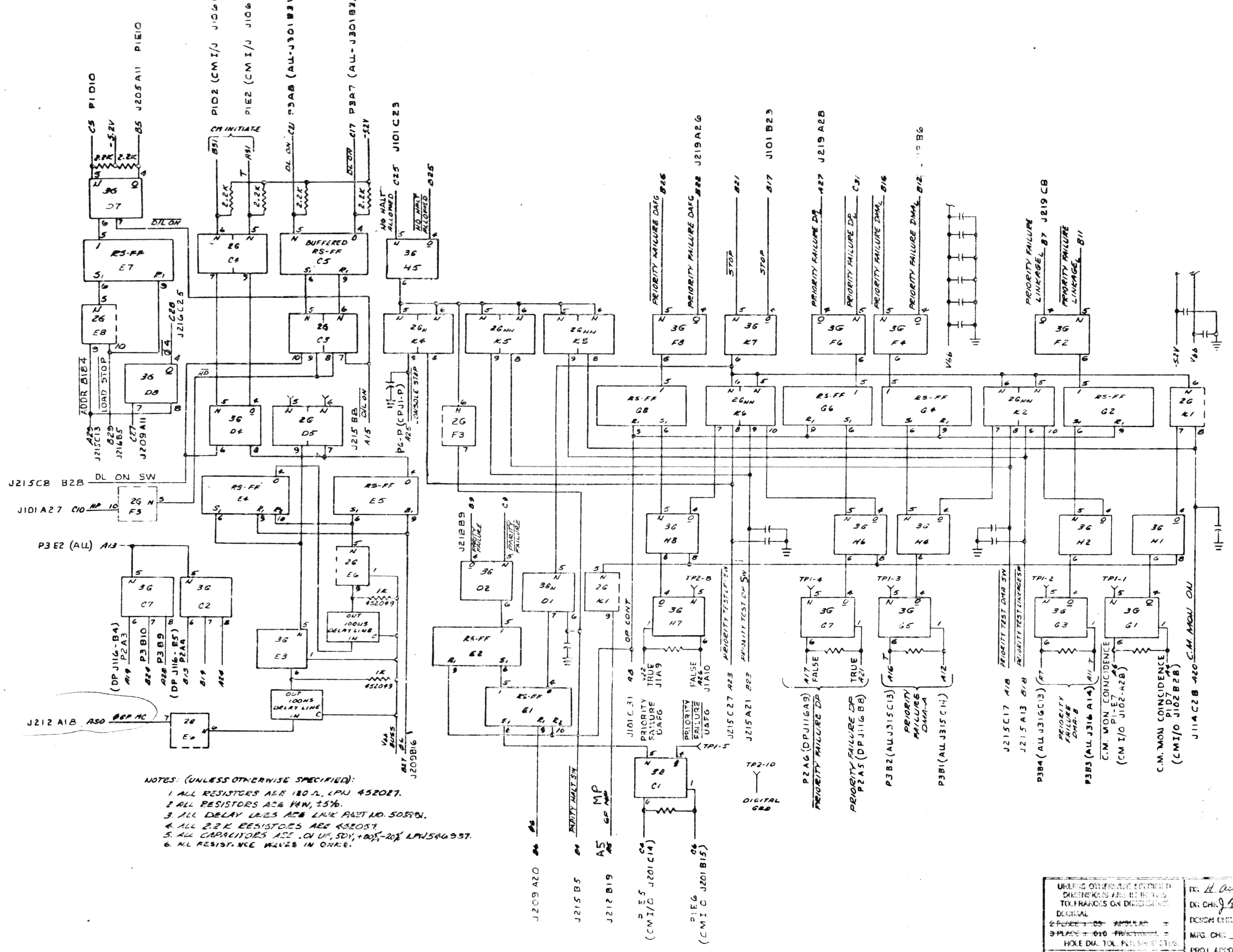

NOTES: (UNLESS OTHERWISE SPECIFIED):

1. ALL RESISTORS ARE 180 Ω, LPN 452027.
2. ALL RESISTORS ARE 1/4W, ±5%.
3. ALL DELAY LINES ARE LINK PART NO. 505881.
4. ALL 2.2 K RESISTORS ARE 452057.
5. ALL CAPACITORS ARE .01 UF, 50V, +80%-20% LPN 546937.
6. ALL RESISTANCE VALUES IN OHMS.

B688000E

A213

UNLESS OTHERWISE SPECIFIED DIMENSIONS ARE IN INCHES TOLERANCES ON DIMENSIONS DECIMAL

~~2 PLACE ± .03~~ ~~ANGULAR~~ ±

~~3 PLACE ± .010~~ ~~FRACTIONAL~~ ±

HOLE DIA. TOL. PER SHOP STDS.

MFR. TO LINK STDS.

MATL

FINISH

DR. H. Acton 10-3-67

DR. CHK. J. Verney 10-17-67

DESIGN CHK. [illegible] 10-23-67

MFG. CHK.

PROJ. APP'D G. Henderson 10/23/67

LINK GROUP, SYSTEMS DIVISION
GENERAL PRECISION, INC.
BINGHAMTON, NEW YORK

LOGIC DIAGRAM PRIORITY CONTROL

SIZE	CODE IDENT NO.	DWG. NO.
D	36378	B688000E

SCALE NONE SHEET 46

NEXT ASSY | USED ON

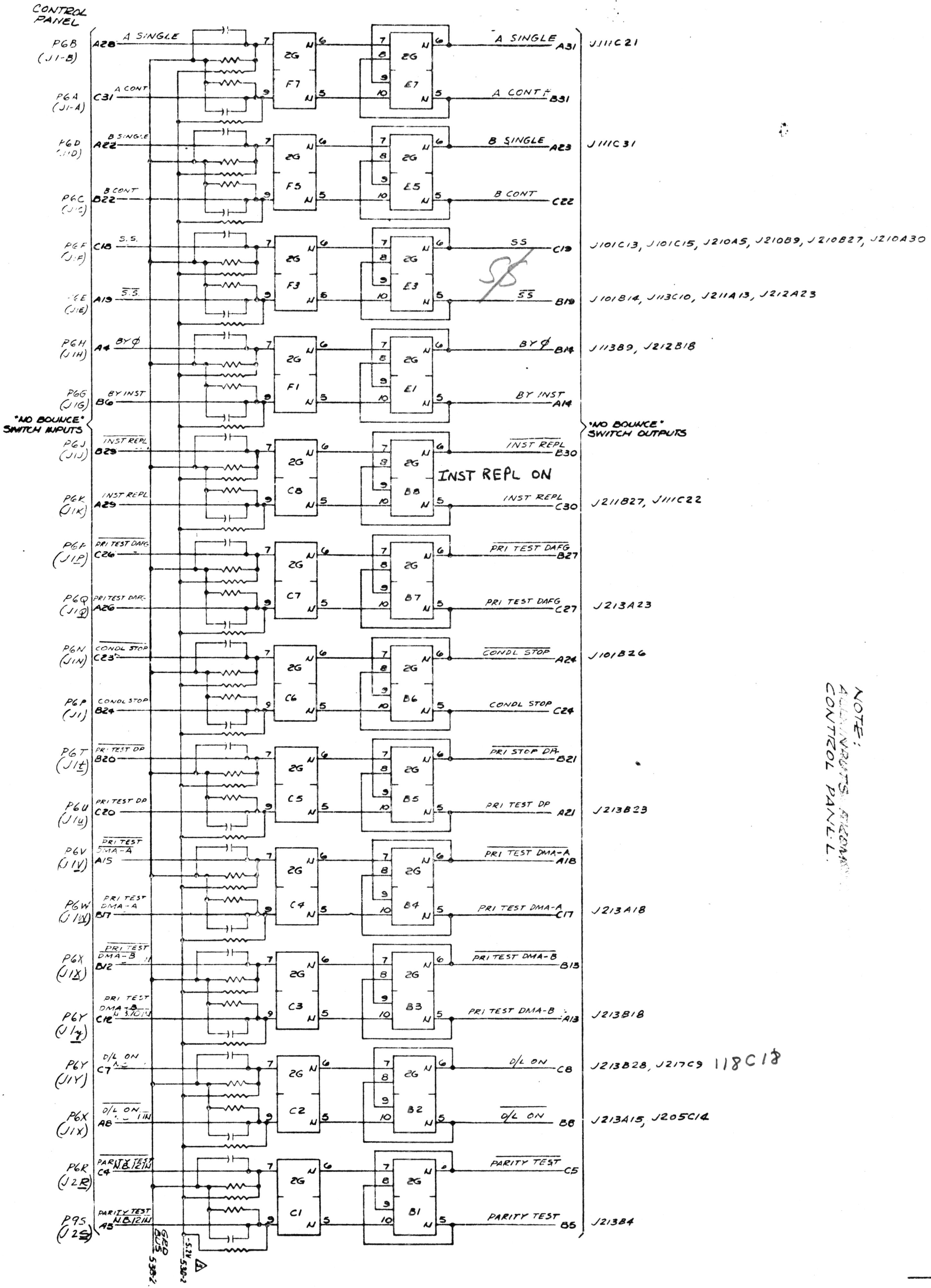

NOTE: ALL INPUTS FROM CONTROL PANEL

A215-1

UNLESS OTHERWISE SPECIFIED DIMENSIONS ARE IN INCHES TOLERANCES ON DIMENSIONS DECIMAL 2 PLACE ± .03 ANGULAR ± 3 PLACE ± .010 FRACTIONAL ± HOLE DIA TOL PER SHOP STDS

MFG TO LINK STDS

MAT'L

FINISH

DR, DR CHK, DESIGN CHK, MFG CHK, PROJ APPD

LINK GROUP SYSTEMS DIVISION
GENERAL PRECISION, INC.
BINGHAMTON, NEW YORK

LOGIC DIAGRAM SWITCH TO MECL LEVEL INTERFACE

SIZE	CODE IDENT NO	DWG NO
D	36378	B688000E

SHEET 47

REVISIONS: ZONE | LTR | DESCRIPTION | DATE | APPROVED

B688000E

[B688000E]

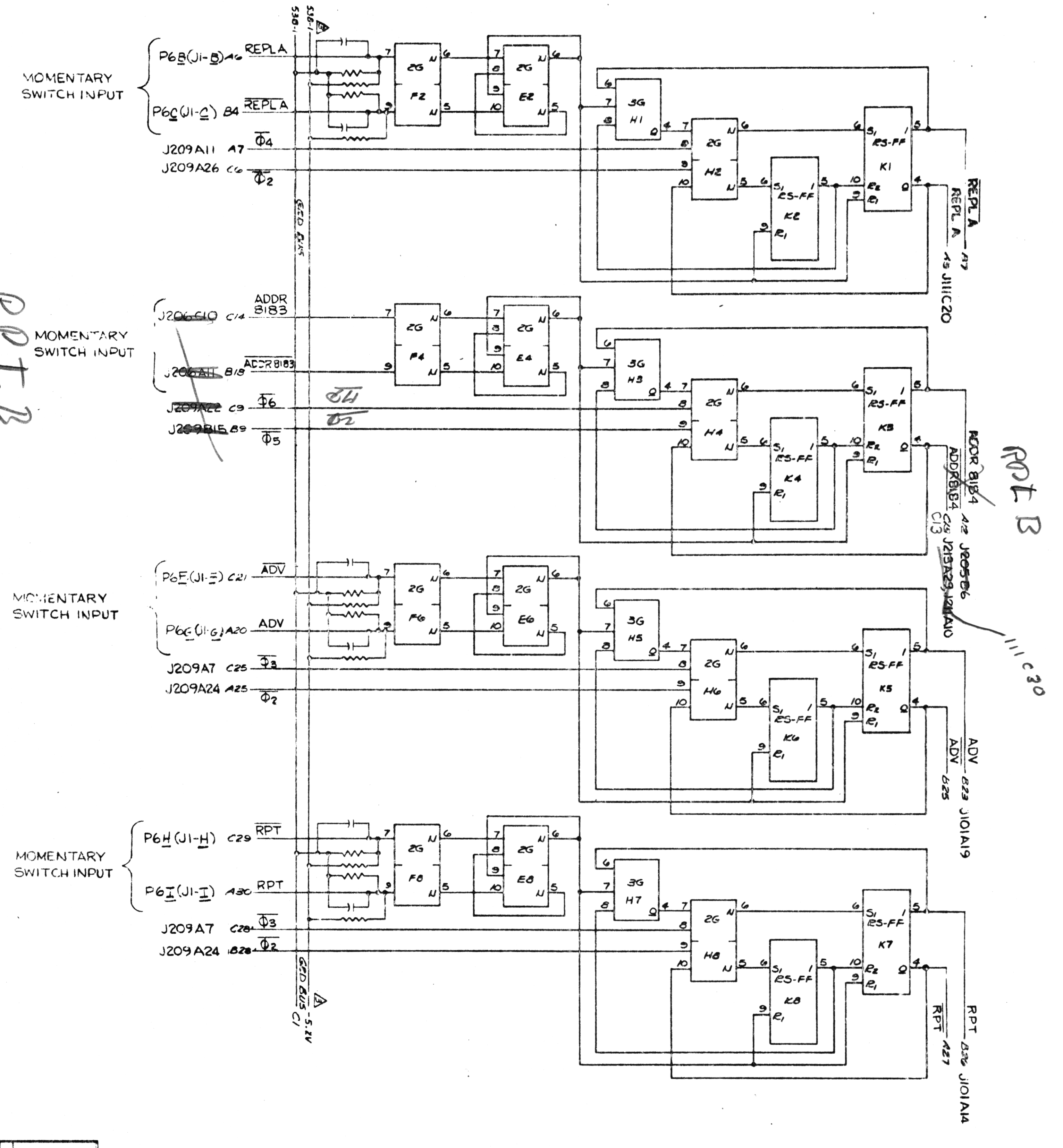

UNLESS OTHERWISE SPECIFIED DIMENSIONS ARE IN INCHES TOLERANCES ON DIMENSIONS DECIMAL 2 PLACE ± .03 ANGULAR ± 3 PLACE ± .010 FRACTIONAL ± HOLE DIA TOL PER SHOP STDS

MATL

FINISH

LINK GROUP SYSTEMS DIVISION GENERAL PRECISION, INC. BINGHAMTON, NEW YORK

A215-2

LOGIC DIAGRAM- SWITCH TO MECL LEVEL INTERFACE

SIZE D CODE IDENT NO 36078 DWG NO B6880006

SCALE NONE SHEET 48

B6880006

REVISIONS

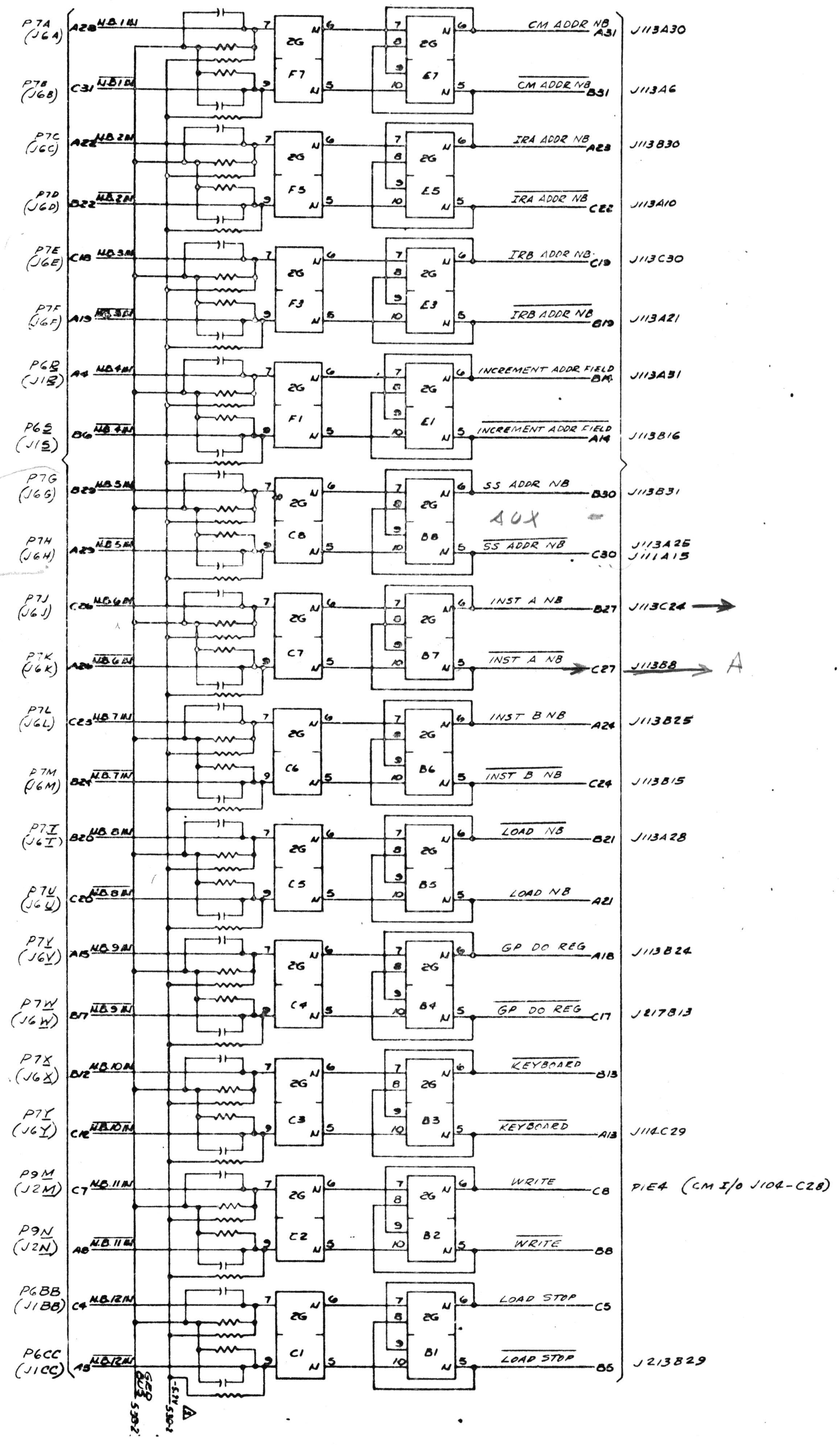

NOTE: ALL INPUTS ARE FROM CONTROL PANELS

A216-1

NEXT ASSY	USED ON
687536	

UNLESS OTHERWISE SPECIFIED DIMENSIONS ARE IN INCHES TOLERANCES ON DIMENSIONS DECIMAL 2 PLACE ± .03 ANGULAR ± 3 PLACE ± .010 FRACTIONAL ± HOLE DIA TOL PER SHOP STDS

MATL

FINISH

MFR TOLINK STDS

DR 10-2-67

DR CHK 10-24-67

DESIGN CHK 10-23-67

MFG CHK

PROJ APPD 10/23/67

LINK GENERAL PRECISION, INC. BINGHAMTON, NEW YORK

LOGIC DIAGRAM SWITCH TO MECL LEVEL INTERFACE

SIZE D CODE IDENT NO. 36378 DWG NO. B680006E

SCALE NONE SHEET 4

REVISIONS: ZONE LTR DESCRIPTION DATE APPROVED

B680006E

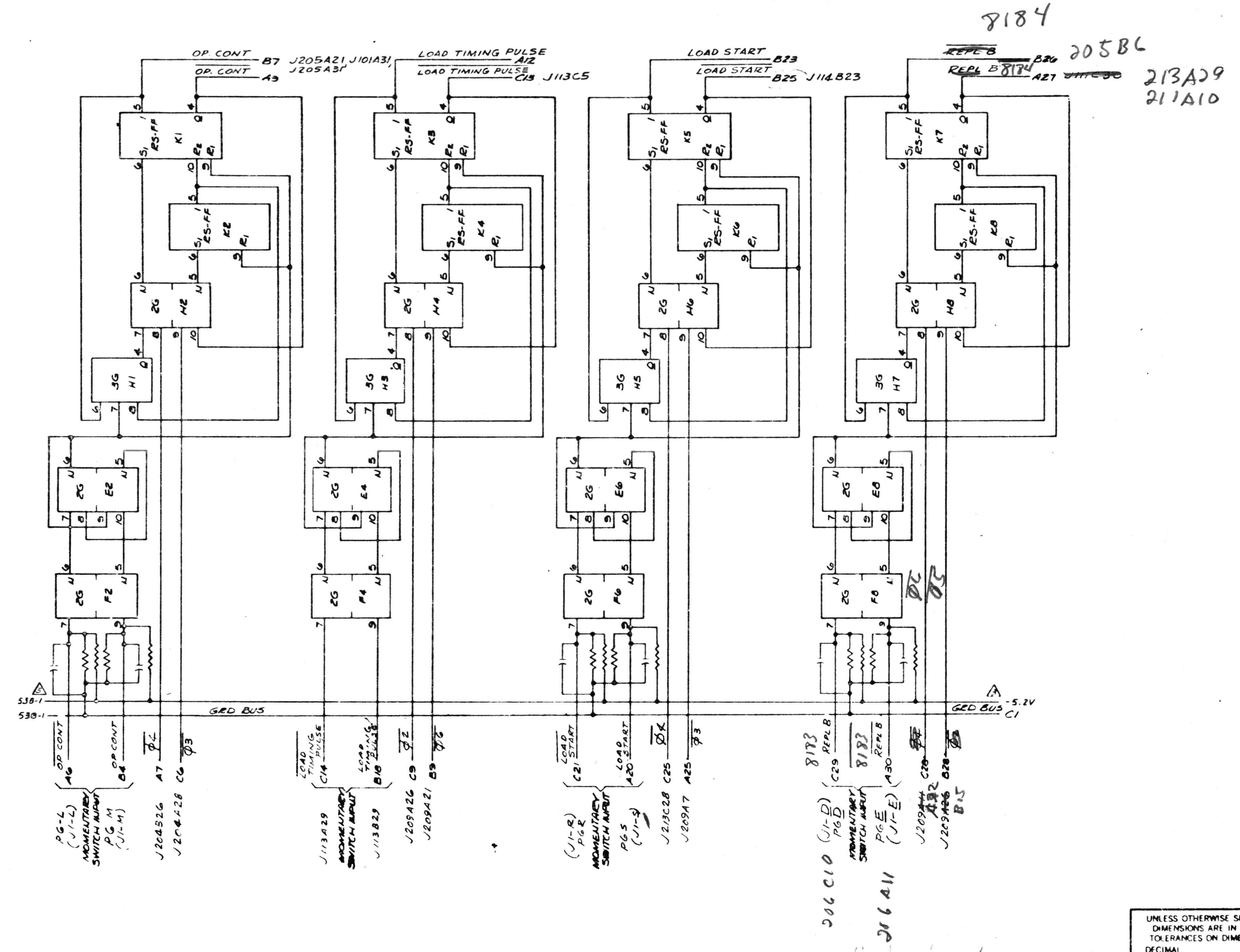

A216-2

REVISIONS	
ZONE	LTR	DESCRIPTION	DATE	APPROVED

UNLESS OTHERWISE SPECIFIED
DIMENSIONS ARE IN INCHES
TOLERANCES ON DIMENSIONS
DECIMAL
2 PLACE · .03 ANGULAR ·
3 PLACE · .010 FRACTIONAL ·
HOLE DIA TOL PER SHOP STDS
MFR TO LINK STDS
MAT'L
FINISH

NEXT ASSY: S7538 — USED ON: 11-3-11-72

DR Bracken 10-4-67
DR CHK J Henry 10-14-67
DESGN CHK L Stott 10-23-67
MFG CHK
PROJ APPD S.J. Andrus 10/23/67

LINK GROUP, SYSTEMS DIVISION
LINK GENERAL PRECISION, INC
BINGHAMTON, NEW YORK

LOGIC DIAGRAM
SWITCH TO MECL
LEVEL INTERFACE

SIZE D | CODE IDENT NO 36378 | DWG NO B688000E

SCALE NONE | SHEET 50

B688000E
A

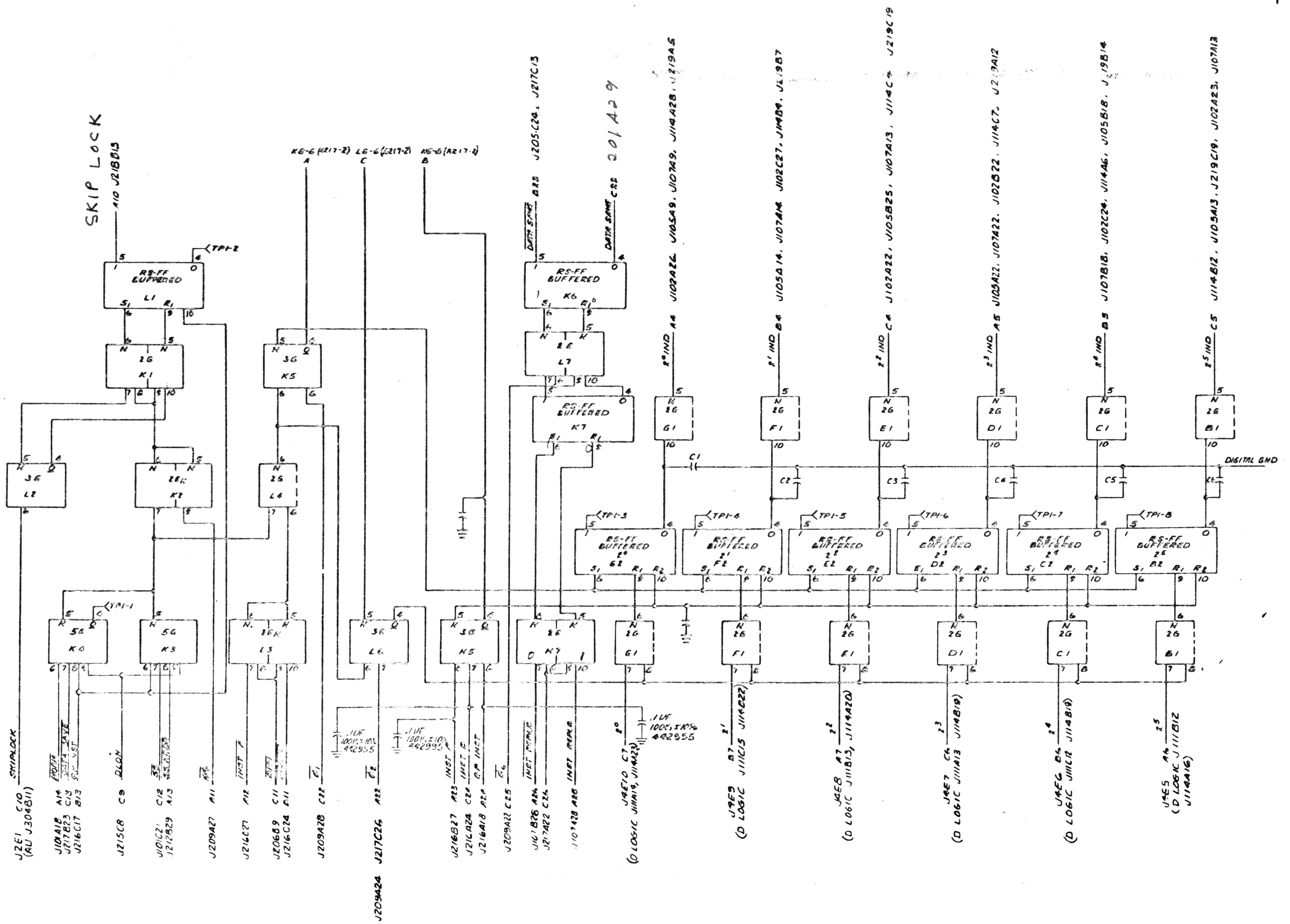

NOTES: UNLESS OTHERWISE SPECIFIED
1. ALL CAPACITORS ARE .01µf, 50V +80% -20%, LPN 546937

A217-1

UNLESS OTHERWISE SPECIFIED DIMENSIONS ARE IN INCHES TOLERANCES ON DIMENSIONS DECIMAL 2 PLACE ± .03 ANGULAR ± 3 PLACE ± .010 FRACTIONAL ± HOLE DIA. TOL. PER SHOP STDS.

LINK GROUP, SYSTEMS DIVISION
BINGHAMTON, NEW YORK

LOGIC DIAGRAM INSTRUCTION SAVE & SKIP LOCK SAVE REGISTER

D 35378 B688000E

B688000E

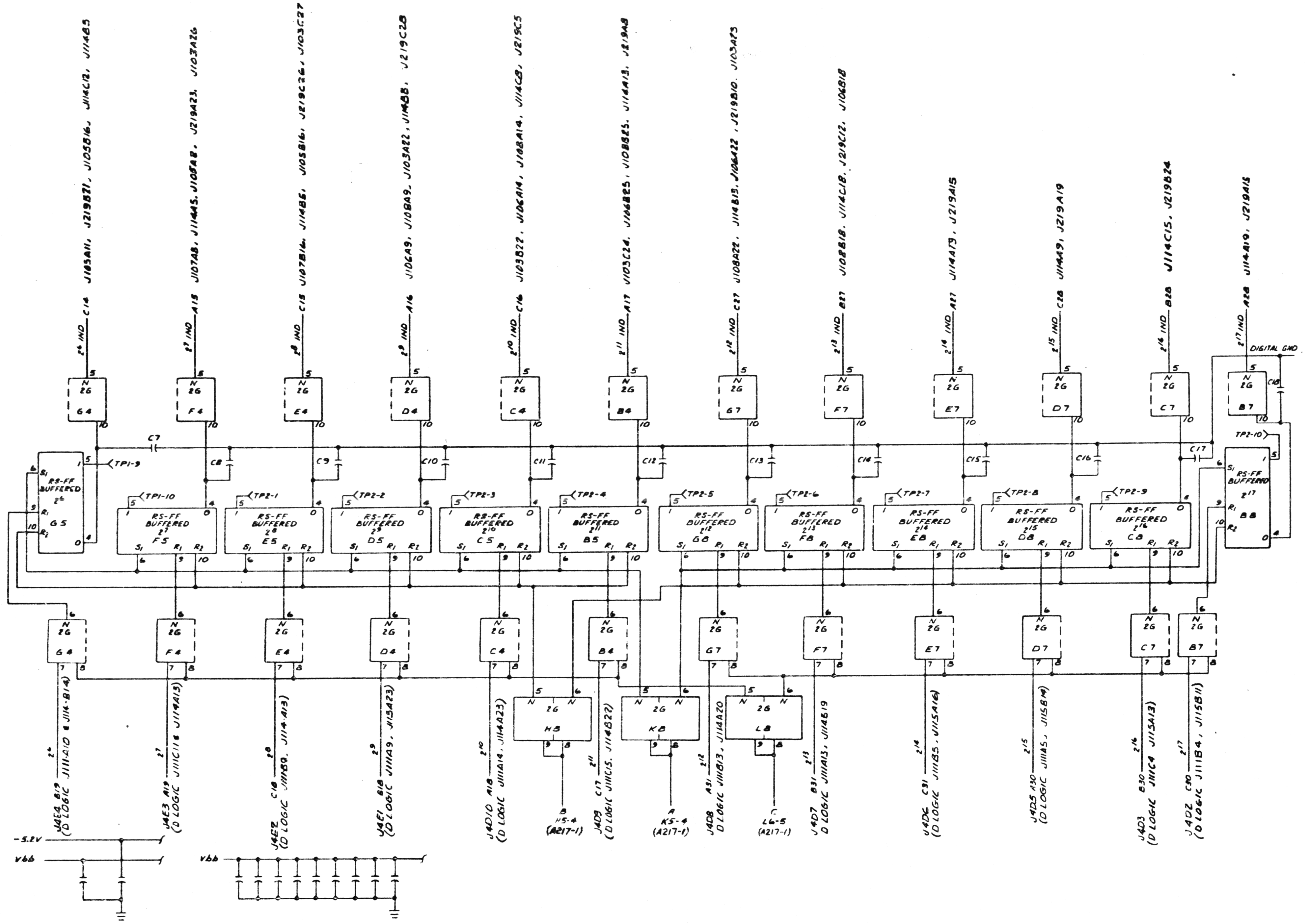

REVISIONS				
ZONE	LTR	DESCRIPTION	DATE	APPROVED

A217-2

UNLESS OTHERWISE SPECIFIED
DIMENSIONS ARE IN INCHES
TOLERANCES ON DIMENSIONS
DECIMAL
2 PLACE ± .03 ANGULAR ±
3 PLACE ± .010 FRACTIONAL ±
HOLE DIA. TOL. PER SHOP STDS

MFR. TO LINK STDS.
MATL
FINISH

687516	AF370-T9
NEXT ASSY	USED ON

DR [signature] 10-2-67
DR CHK [signature] 10-14-67
DESGN CHK [signature] 10-23-67
MFG CHK
PROJ APPD [signature] 10/27/67

LINK GENERAL PRECISION, INC.
LINK GROUP, SYSTEMS DIVISION
BINGHAMTON, NEW YORK

LOGIC DIAGRAM INSTRUCTION SAVE & SKIP LOCK SAVE-REGISTER

SIZE D | CODE IDENT NO 36378 | DWG NO B688000E

SCALE — | SHEET 52

ZONE	LTR	REVISIONS DESCRIPTION	DATE	APPROVED

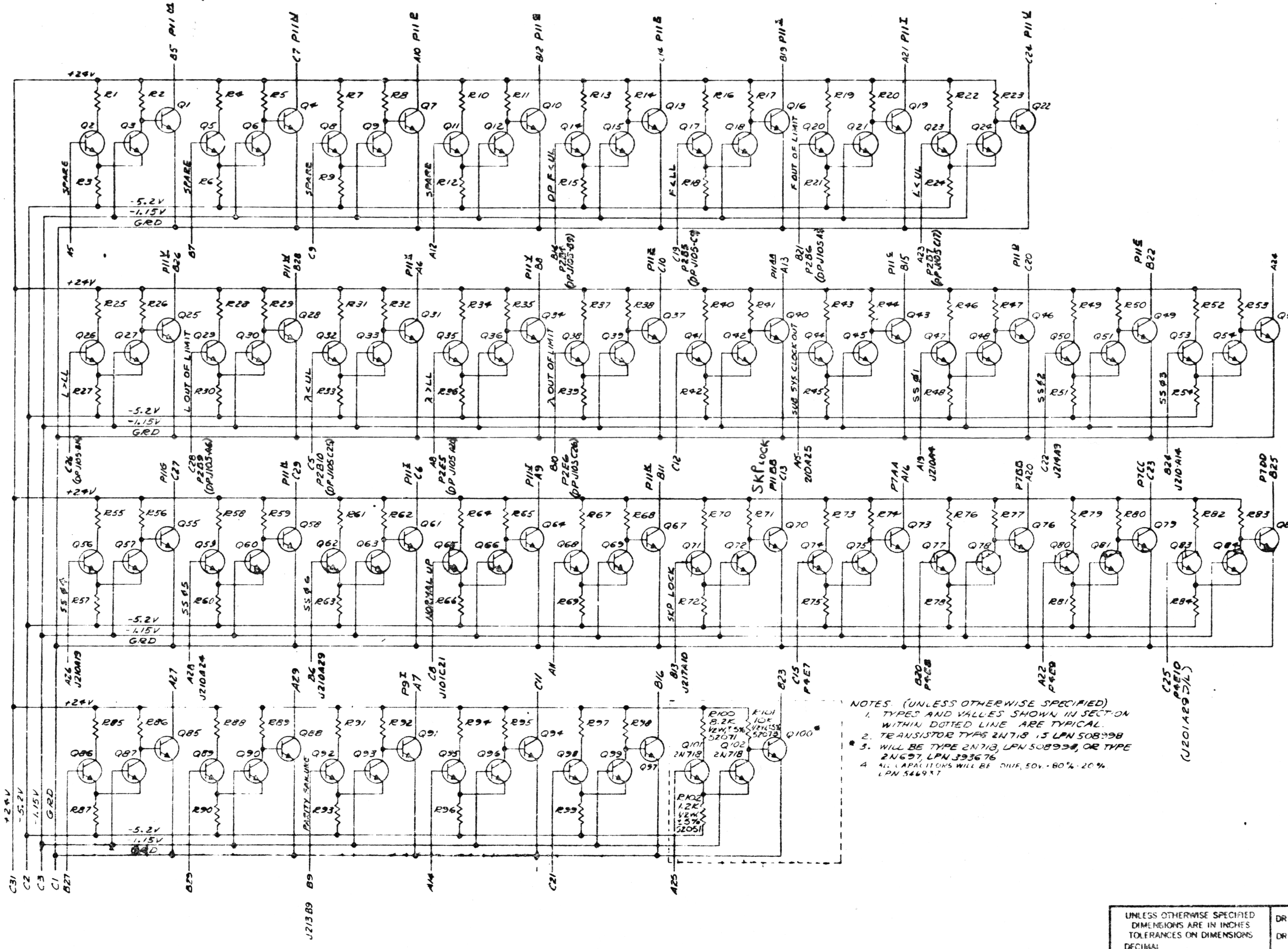

NOTES (UNLESS OTHERWISE SPECIFIED)
1. TYPES AND VALUES SHOWN IN SECTION WITHIN DOTTED LINE ARE TYPICAL.
2. TRANSISTOR TYPE 2N718 IS LPN 508998
* 3. WILL BE TYPE 2N718, LPN 508998, OR TYPE 2N697, LPN 393676
4. ALL CAPACITORS WILL BE .01UF, 50V. +80% -20% LPN 546937

NOTES:
P11 IN SS → J3 IN CP
P2 IN SS → J2 IN DP
P7 IN SS → J6 IN CP
P4 IN SS → J4 IN D/L

B688000E

A218

NEXT ASSY	USED ON
687530	B/F37U-T9

UNLESS OTHERWISE SPECIFIED DIMENSIONS ARE IN INCHES TOLERANCES ON DIMENSIONS
DECIMAL
2 PLACE ± .03 ANGULAR ±
3 PLACE ± .010 FRACTIONAL ±
HOLE DIA TOL PER SHOP STDS
MFR TO LINK STDS
MATL
FINISH

DR Bell 9-30-67
DR CHK J. Kenney 11-14-67
DESGN CHK 10-23-67
MFG CHK
PROJ APPD 10/23/67

LINK GROUP, SYSTEMS DIVISION
GENERAL PRECISION, INC.
BINGHAMTON, NEW YORK

SCHEMATIC DIAG. LAMP DRIVER

SIZE	CODE IDENT NO.	DWG. NO.
D	36378	B688000E

SCALE — SHEET 53

REVISIONS

ZONE	LTR	DESCRIPTION	DATE	APPROVED

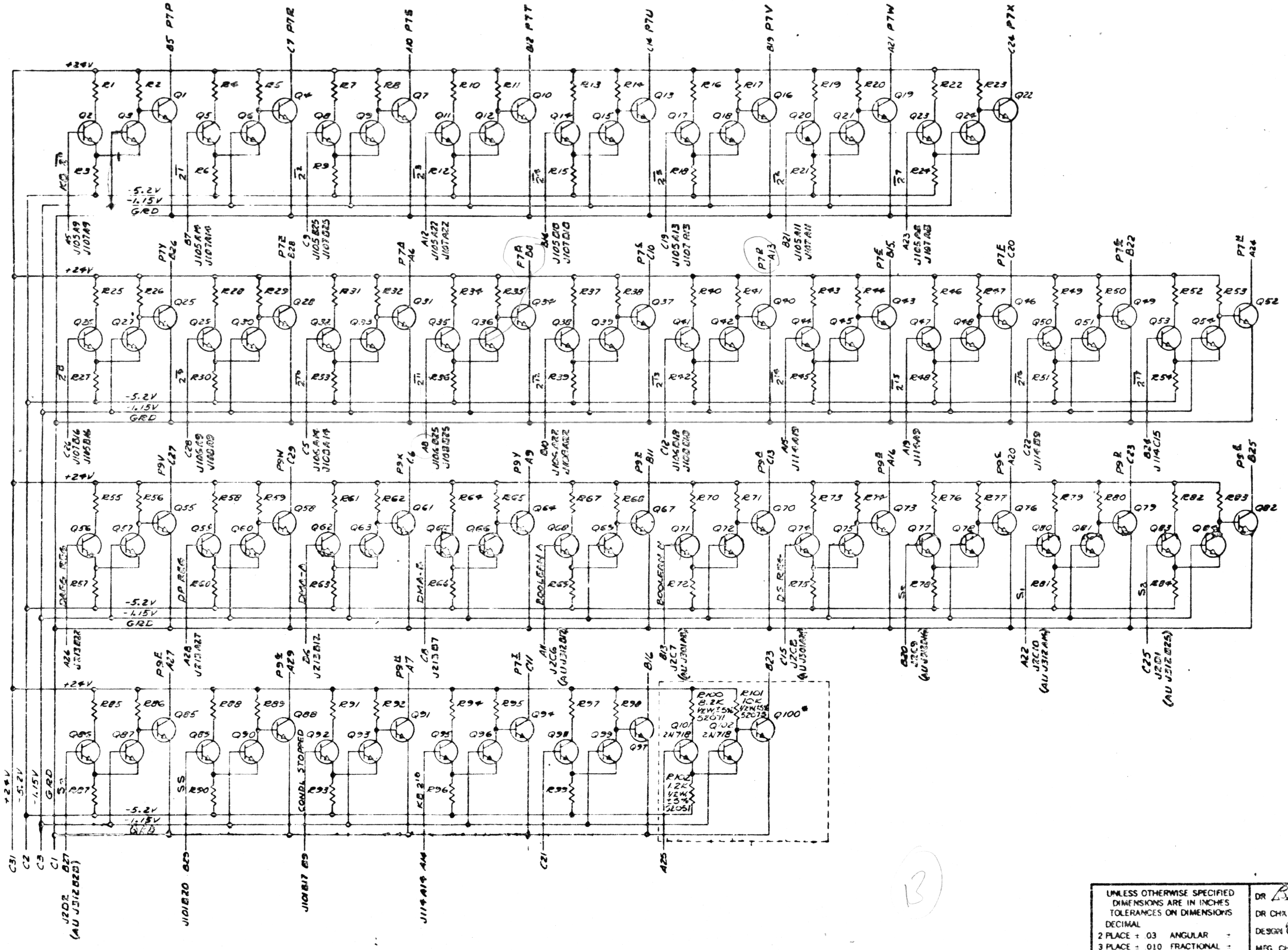

NOTE:
P7 IN SS ⇨ J6 IN CP
P9 IN SS ⇨ J8 IN CP
J2 IN SS ⇦ P6 IN AU

B688000E

A219

UNLESS OTHERWISE SPECIFIED DIMENSIONS ARE IN INCHES TOLERANCES ON DIMENSIONS
DECIMAL
2 PLACE ± .03 ANGULAR ±
3 PLACE ± .010 FRACTIONAL ±
HOLE DIA. TOL. PER SHOP STDS
MFR. TO LINK STDS

MATL

FINISH

687536	A/F370-19
NEXT ASSY	USED ON

DR Biggs 9-30-67
DR CHK J. Hewey 10-14-67
DESIGN CHK 10-13-67
MFG CHK
PROJ APPD 10-13-67

LINK GROUP, SYSTEMS DIVISION
GENERAL PRECISION, INC.
BINGHAMTON, NEW YORK

SCHEMATIC DIAGRAM LAMP DRIVER

SIZE	CODE IDENT NO.	DWG. NO.
D	36378	B688000E

SCALE — SHEET 54

REVISIONS

ZONE	LTR	DESCRIPTION	DATE	APPROVED
	A	RELEASE NO. 35529	9/30/66	[illegible]
	B	SEE SHEET 17	[illegible]	[illegible]
	C	SEE SHEET 4, 12, 14, 16, 17, 18 & 19 LEK	[illegible]	W.F.P.
	D	SEE SHEET 3 AND 4 mL	1/19/67	[illegible]
	E	SEE SHEET 12, 13, 14, 16, 17 mL	1/27/67	W.F.P.
	F	AS NOMENCLATURE WAS RELAY PANEL. SEE SHEETS 2, 12, 13, 14, 16, 17, 18, 19 mL	6/5/67	[illegible]
	G	IN USED-ON BLK ADDED J 35 A/F 37U-T9 WAS A/F 37A-T31	8/16/68	[illegible]
	H	SEE SHEET 17	[illegible]	[illegible]
	J	SEE SHEET 16	[illegible]	[illegible]

CONTROL PANEL

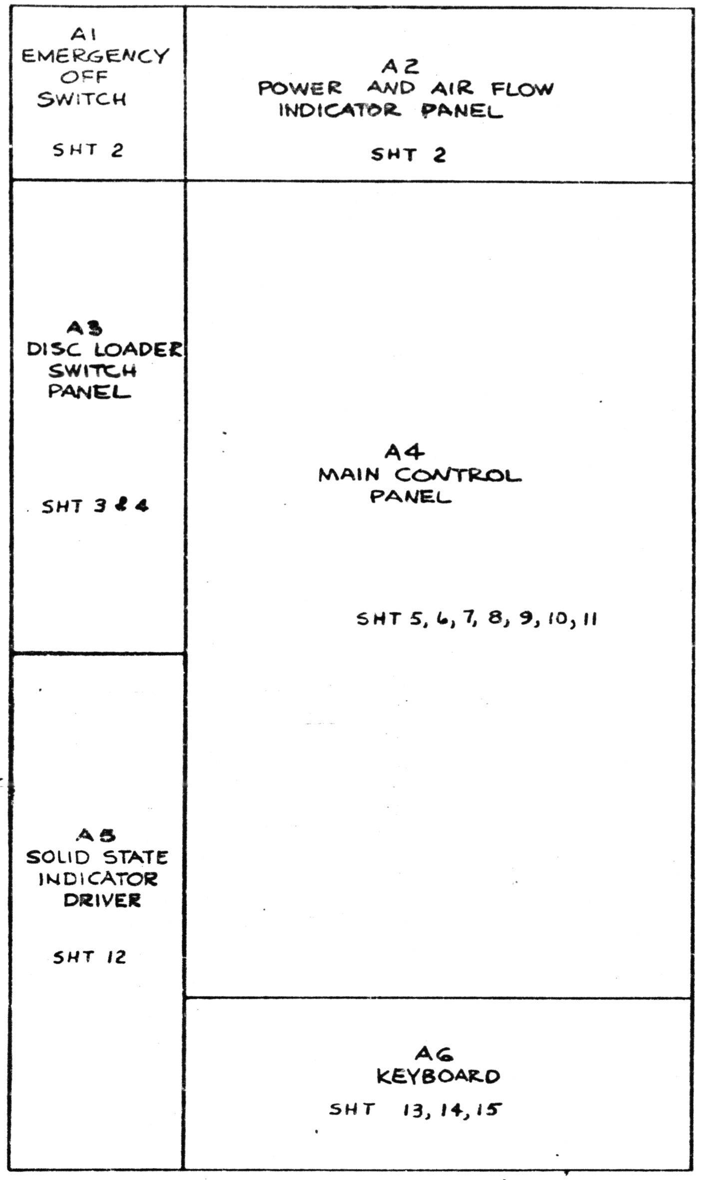

CONTROL PANEL
REAR DOOR – A7 ASSY

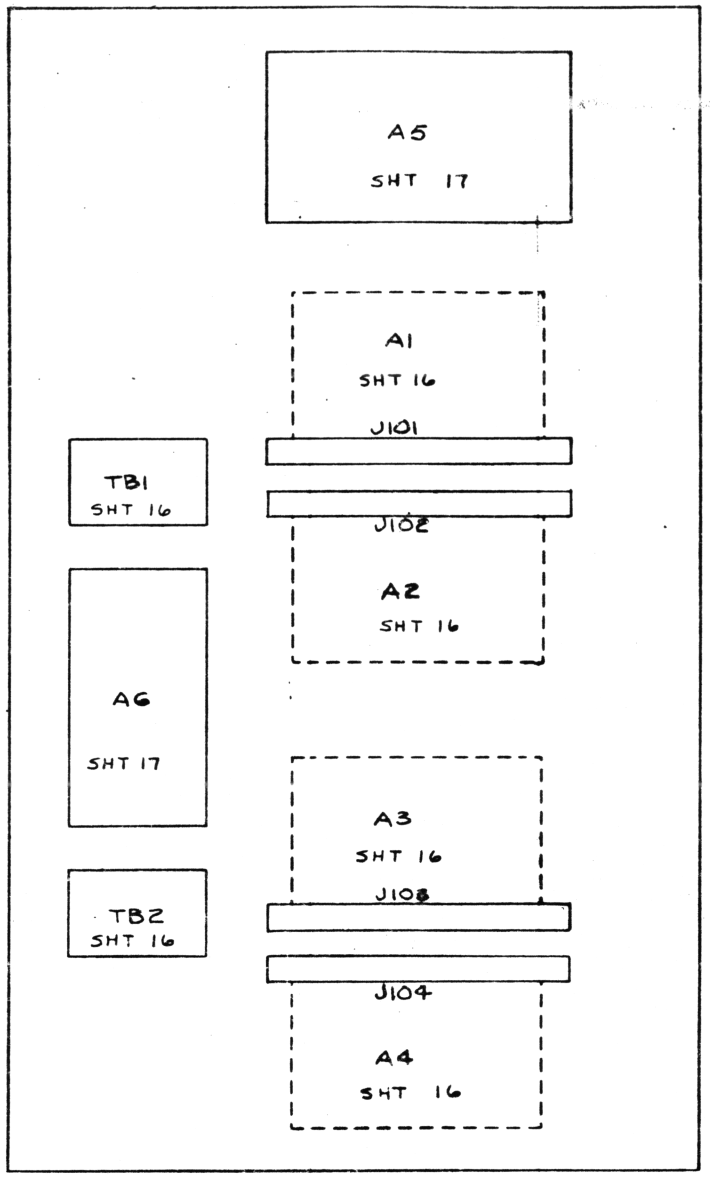

NOTES: UNLESS OTHERWISE SPECIFIED

1. ALL NOTES APPEARING ON INDIVIDUAL SHEETS APPLY TO THAT SHEET ONLY.
2. BLACK TUBING LPN 247013 IS TO BE USED A/R ON ALL HINGED HARNESS BREAKOUTS.
3. SKETCHS 1 AND 2 APPEARING ON THIS SHEET ARE FOR REFERENCE ONLY, AND ARE TO BE USED ONLY AS AN AID IN ELECTRICAL ASSEMBLY. THE SPACES INDICATED ARE GENERAL DESTINATION AREAS AND APPLY TO THE FIRST LETTER AND NUMBER OF THE CALLOUT ONLY.
4. EXAMPLE OF CALLOUT SHOWN BELOW

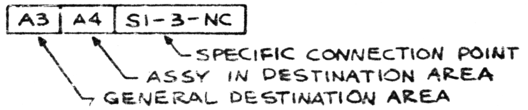

5. THE FOLLOWING SHALL BE WIRED WITH TRITIN WIRE NO. 20, LPN 508875 ALL +24V, +24V RETURNS, -5.2V DIGITAL, -5.2V RETURNS, A4A46, A4A47, ALL OTHER WIRES TO BE TRITIN WIRE NO. 24, LPN 508874.

686722	J 35 A/F 37U-T9
NEXT ASSY	USED ON

UNLESS OTHERWISE SPECIFIED DIMENSIONS ARE IN INCHES TOLERANCES ON DIMENSIONS DECIMAL
~~2 PLACE ± .03 ANGULAR ±~~
~~3 PLACE ± .010 FRACTIONAL ±~~
~~HOLE DIA. TOL. PER SHOP STD.~~
MFR. TO LINK STDS.
MATL
FINISH

DR Bartl 3-6-66
DR CHK C. J. HURD
DESGN CHK C. J. HURD
MFG. CHK
PROJ. APPD

LINK GENERAL PRECISION, INC. LINK GROUP SYSTEMS DIVISION BINGHAMTON, NEW YORK

WIRING DIAGRAM – MAIN CONTROL PANEL

SIZE D | CODE IDENT NO. 36378 | DWG NO. 686722E
SCALE NONE | SHEET 1 OF 20

686722E J

REVISIONS				
ZONE	LTR	DESCRIPTION	DATE	APPROVED
	F	A6A1S2-6R WAS A6A1S2-M, A6A1S1-6L WAS A6A1S1-11 & A6A1S1-B WAS A6A1-W	6/5/67	R.L.B.
	G	IN USED ON BLK ADDED J35 AA A/F 37U-T9 WAS A/F 37A-T31 ADDED SUB TITLE ABOVE TITLEBLK	3/16/68	

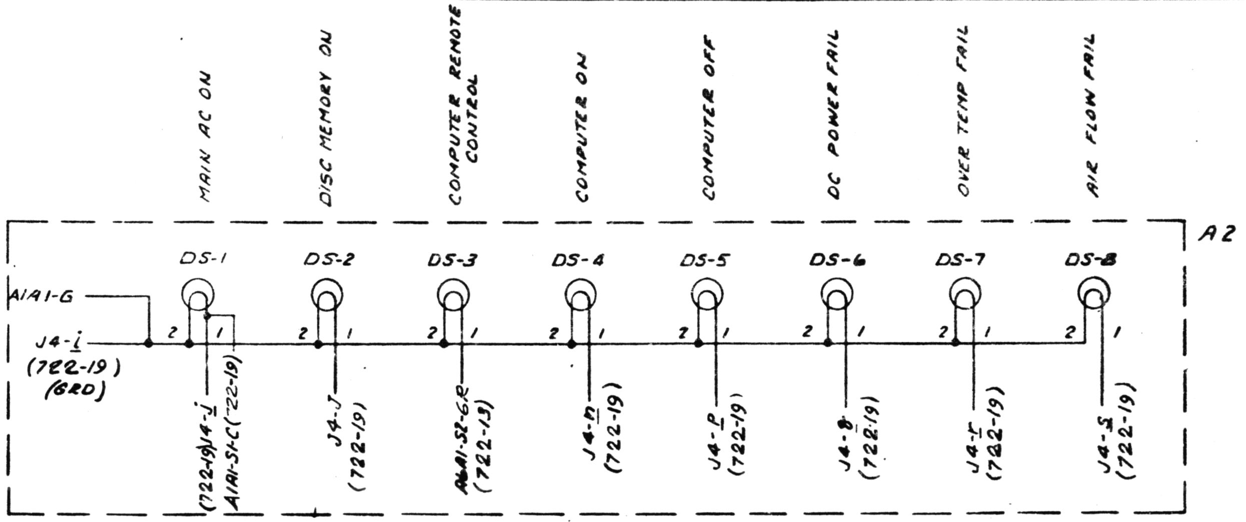

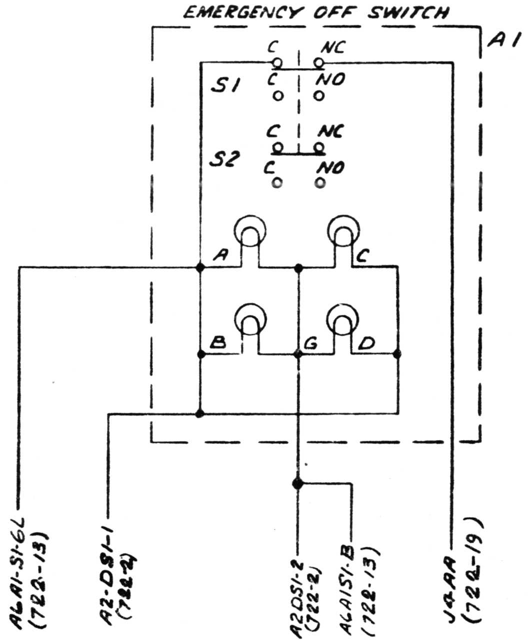

NOTES: UNLESS OTHERWISE SPECIFIED
6. THIS SHEET REFERS TO A1 & A2 OF 686722E.

686722E

J

COMPUTER STATUS AND FAILURE SECTION

NEXT ASSY	USED ON
686722	J 35 A/F 37U-T9

UNLESS OTHERWISE SPECIFIED DIMENSIONS ARE IN INCHES TOLERANCES ON DIMENSIONS DECIMAL
~~2 PLACE ± .03 ANGULAR ±~~
~~3 PLACE ± .010 FRACTIONAL ±~~
~~HOLE DIA. TOL. PER SHOP STDS.~~
MFR. TO LINK STDS.
MATL
FINISH

DR D. BREWER 11-20-65
DR CHK
DESGN CHK C.J. Hurd
MFG. CHK
PROJ. APPD

LINK GENERAL PRECISION, INC.
LINK GROUP, SYSTEMS DIVISION
BINGHAMTON, NEW YORK

WIRING DIAGRAM-
MAIN CONTROL PANEL

SIZE	CODE IDENT NO.	DWG NO.
D	36378	686722E

SCALE NONE
SHEET 2

FORM NO. F 1474-4B

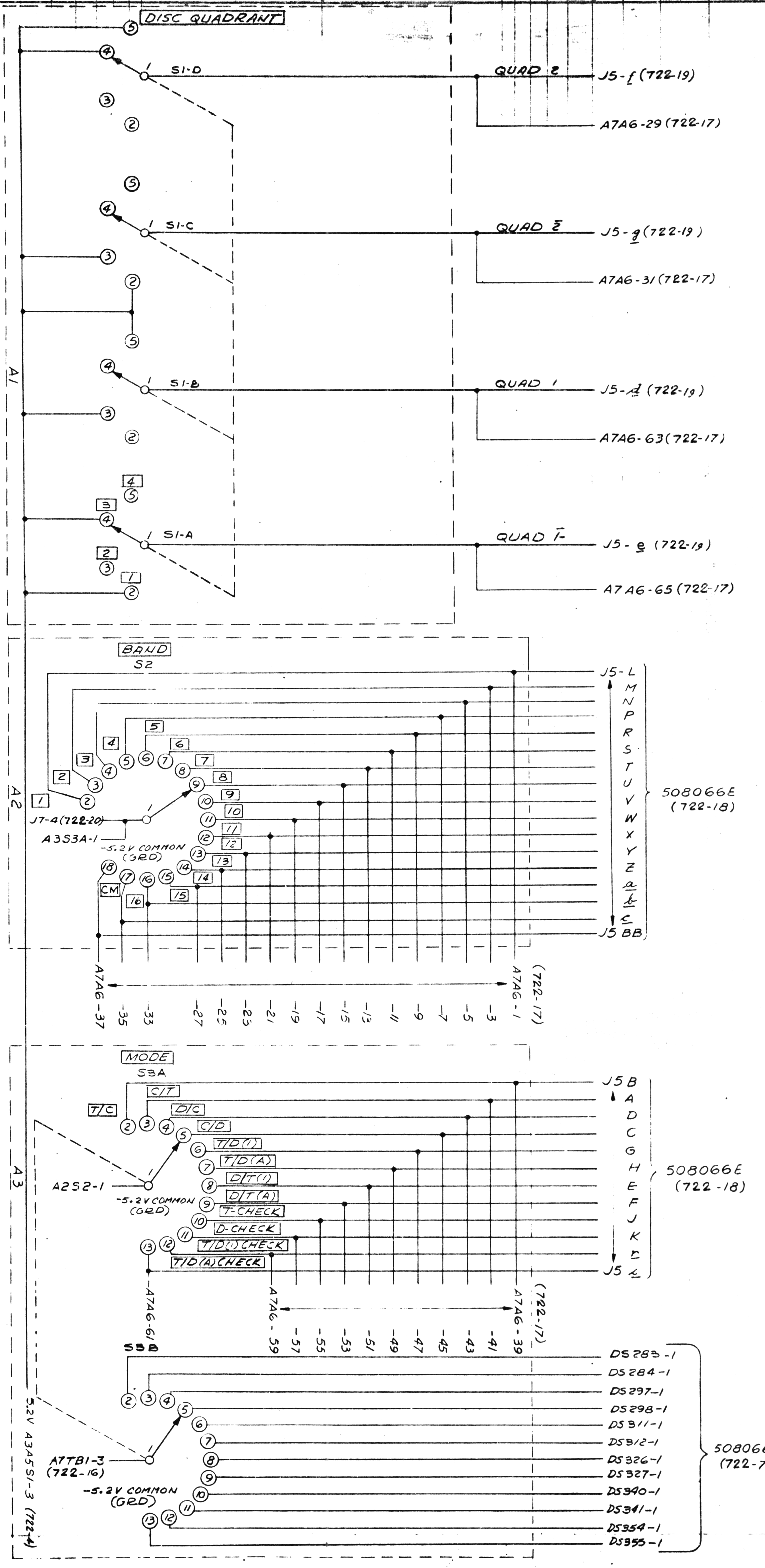

NOTES:
7. THIS SHEET REFERS TO ASSY A3 OF 686722E THE DISC LOADER PANEL.

DISC LOAD AND BAND PATTERN SELECTOR SECTION

REVISIONS				
SYM	ZONE	DESCRIPTION	DATE	APPROVED
D		A3A1S1-A-2 WAS TO A3A4S2-20		
G		ADDED SUBTITLE, IN USED ON BLK ADDED J35 A/F 37U T9 WAS A F 37A T31		

NEXT ASSY	USED ON
	J35 A/F 37U-T9

UNLESS OTHERWISE SPECIFIED DIMENSIONS ARE IN INCHES TOLERANCES ON DIMENSIONS DECIMAL 2 PLACE ± .03 3 PLACE ± .010 4 PLACE ± .0005 FRACTIONAL ± ANGULAR ±

MATL

FINISH

DRAWING GRADE
DR Ken Lowry
CHK
ENGR
APPD

LINK DIVISION SIMULATION AND CONTROL GROUP GENERAL PRECISION, INC BINGHAMTON, NEW YORK

WIRING DIAGRAM— MAIN CONTROL PANEL

CODE IDENT NO.	SIZE	DWG NO.
36378	D	686722E

SCALE NONE — SHEET 3

686722E B

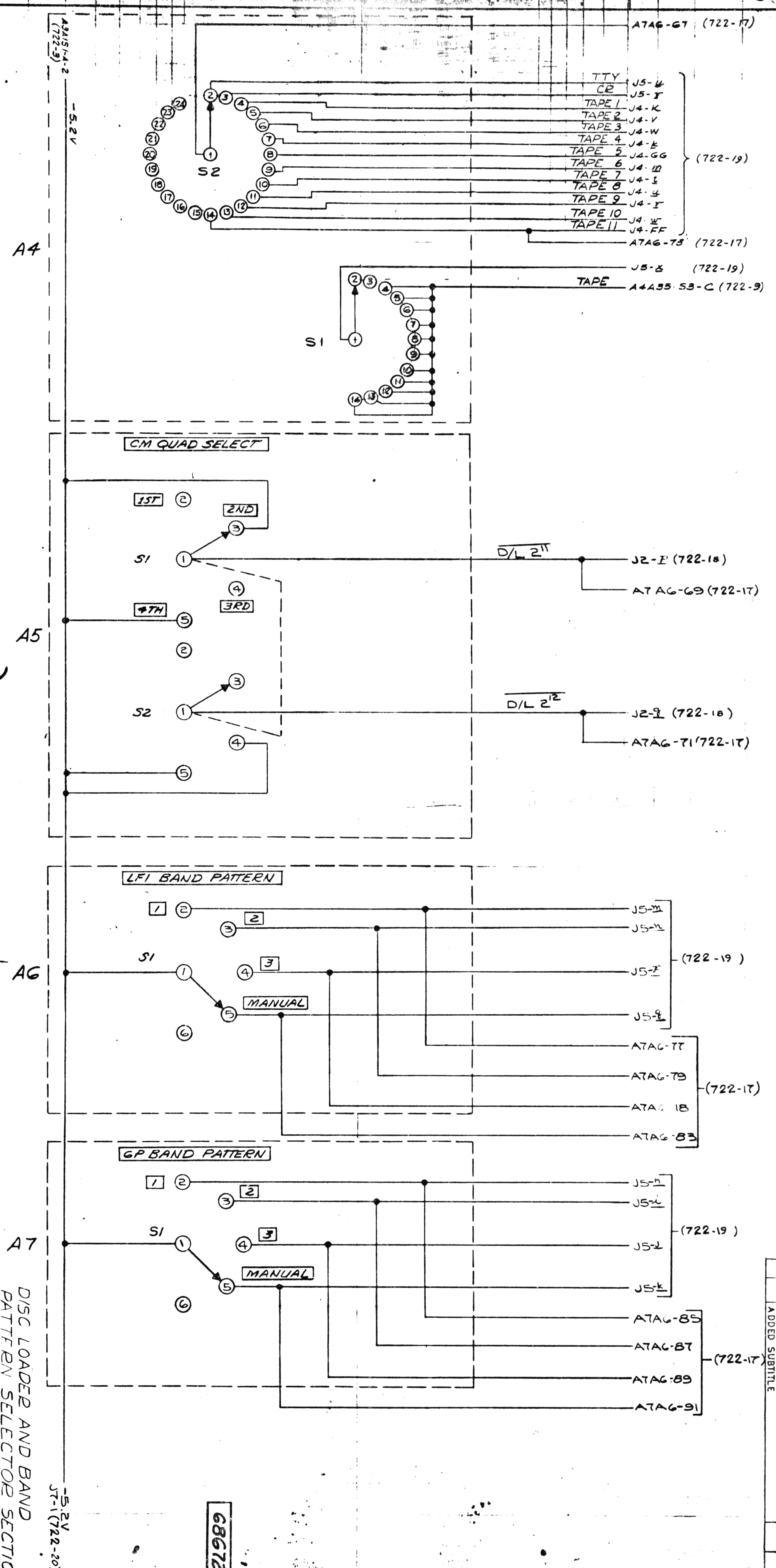

NOTE: THIS SHEET REFERS TO
8. ASSEMBLY A3 OF 686722E
DISC LOADER PANEL.

DISC LOADER AND BAND
PATTERN SELECTOR SECTION

REVISIONS				
SYM	ZONE	DESCRIPTION	DATE	APPROVED
C		ADDED JUMPER TO A4S2 PINS 15 THRU 24		
D		DELETED JUMPER FROM A4S2 PINS 15 THRU 24. DELETED RESISTORS (12) A7A4S2		
G		IN USED ON BLK ADDED J35 A/F 37U-T9 WAS A/F 37A-T31 AT ZONE C4 ADDED TAPE 1 ETC COLUMN ADDED SUBTITLE		

NEXT ASSY	USED ON
686722	J35 A/F 37U-T9

UNLESS OTHERWISE SPECIFIED DIMENSIONS ARE IN INCHES TOLERANCES ON DIMENSIONS DECIMAL ± FRACTIONAL ±

MAT'L —
FINISH —

DRAWING GRADE
DR
CHK
ENGR
APPD

LINK DIVISION, SIMULATION AND CONTROL GROUP
LINK GENERAL PRECISION, INC
BINGHAMTON, NEW YORK

WIRING DIAGRAM — MAIN CONTROL PANEL

CODE IDENT NO. 36378 | SIZE D | DWG NO. 686722E
SCALE NONE | SHEET 4

686722E

SYM	ZONE	DESCRIPTION	DATE	APPROVED
G		ADDED SUBTITLE; IN USED ON BLK ADDED J 35, A/F 37U-T9 WAS A/F 37A-T51.	3/15/68	

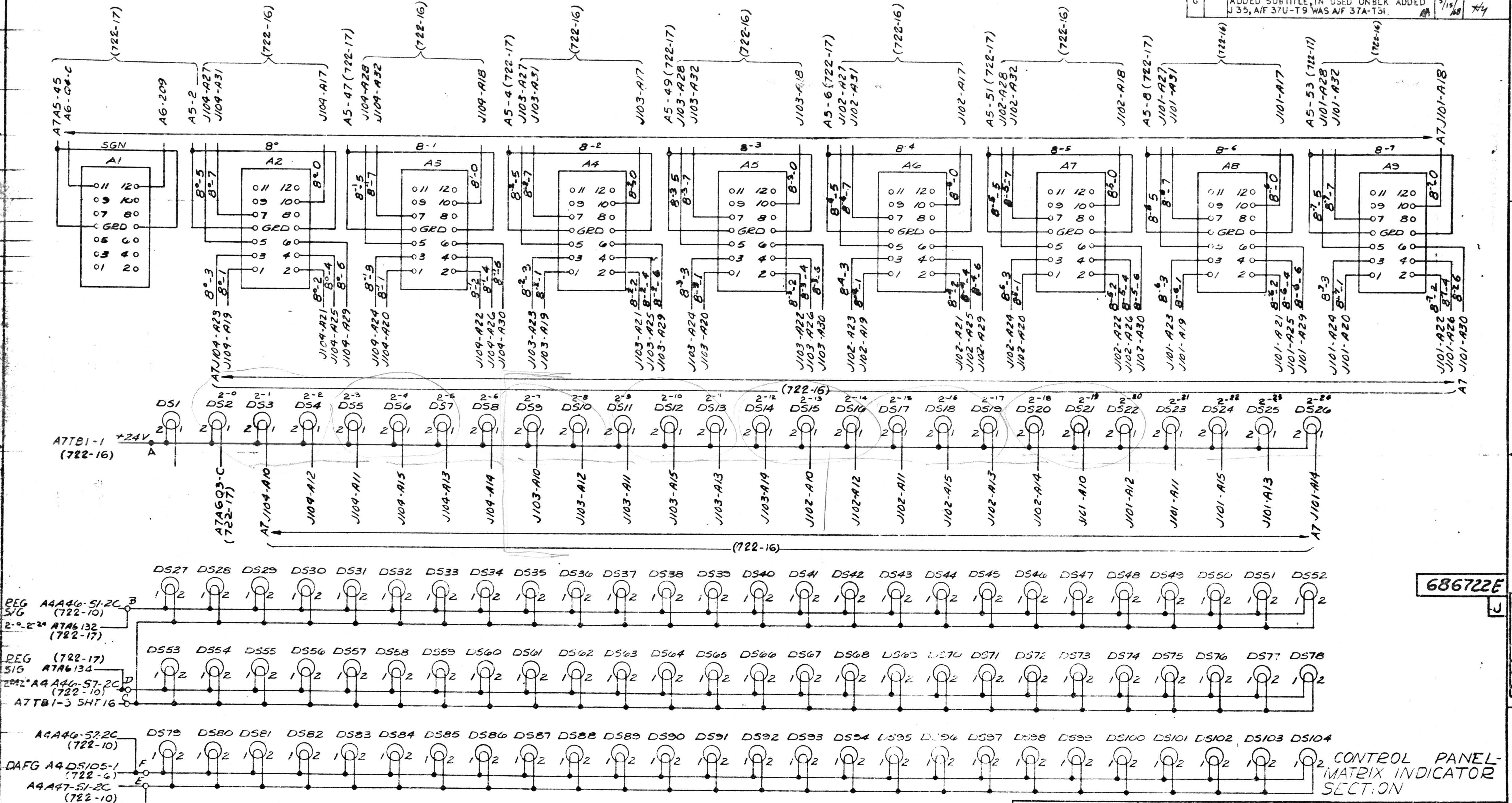

CONTROL PANEL-MATRIX INDICATOR SECTION

NOTES:

5. THIS SHEET REFERS TO SUBASSY A4 OF 686722E MAIN INDICATOR AND SWITCH PANEL.

686722	A/F 37U-T9 J35
NEXT ASSY	USED ON

UNLESS OTHERWISE SPECIFIED
DIMENSIONS ARE IN INCHES
TOLERANCES ON DIMENSIONS
DECIMAL: 2 PLACE ± .03; 3 PLACE ± .010; 4 PLACE ± .0005
ANGULAR: ± —
FRACTIONAL: ± —
MATL
FINISH

DRAWING GRADE
DR G. VanDyne 6-6-66
CHK 6-6-66
ENGR C. J. HURD 6-6-66
APPD 6-9-66

LINK DIVISION, SIMULATION AND CONTROL GROUP
GENERAL PRECISION, INC
BINGHAMTON, NEW YORK

WIRING DIAGRAM
MAIN CONTROL PANEL

CODE IDENT NO.	SIZE	DWG NO.
36378	D	686722E

SCALE NONE
SHEET 5

686722E

SYM	ZONE	REVISIONS DESCRIPTION	DATE	APPROVED
G		ADDED SUBTITLE; IN USED ON BLK ADDED J35; A/F 37U-T9 WAS A/F 37A-T31 AA	3/15/68	

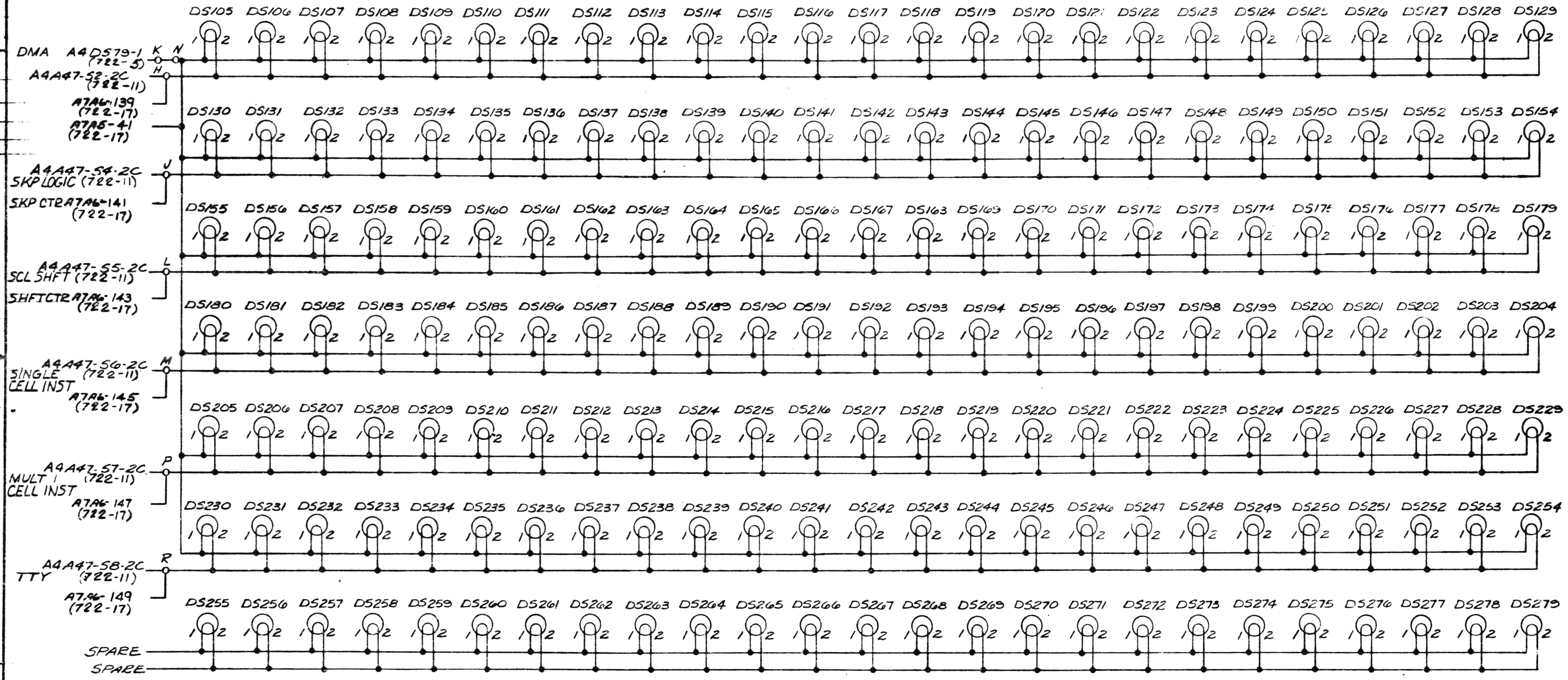

CONTROL PANEL-MATRIX INDICATOR SECTION

NOTES

10. THIS SHEET REFERS TO ASSY A4 OF 686722E MAIN INDICATOR AND SWITCH PANEL

NEXT ASSY	USED ON
	J35 A/F 37U-T9

UNLESS OTHERWISE SPECIFIED
DIMENSIONS ARE IN INCHES
TOLERANCES ON DIMENSIONS
DECIMAL ANGULAR
2 PLACE ± .03 ±
3 PLACE ± .010 FRACTIONAL
4 PLACE ± .0005 ±
MATL
FINISH

DRAWING GRADE
DR G. VanWyne
CHK
ENGR C. J. HURD
APPD

LINK DIVISION, SIMULATION AND CONTROL GROUP
LINK GENERAL PRECISION, INC
BINGHAMTON, NEW YORK

WIRING DIAGRAM MAIN CONTROL PANEL

CODE IDENT NO.	SIZE	DWG NO.
36378	D	686722E

SCALE NONE SHEET 6

686722E J

SYM	ZONE	REVISIONS DESCRIPTION	DATE	APPROVED
G		ADDED SUBTITLE; IN USED ON BLK ADDED ADDED J35; A/F 37U-T9 WAS A/F 37U-T31	3/15/68	

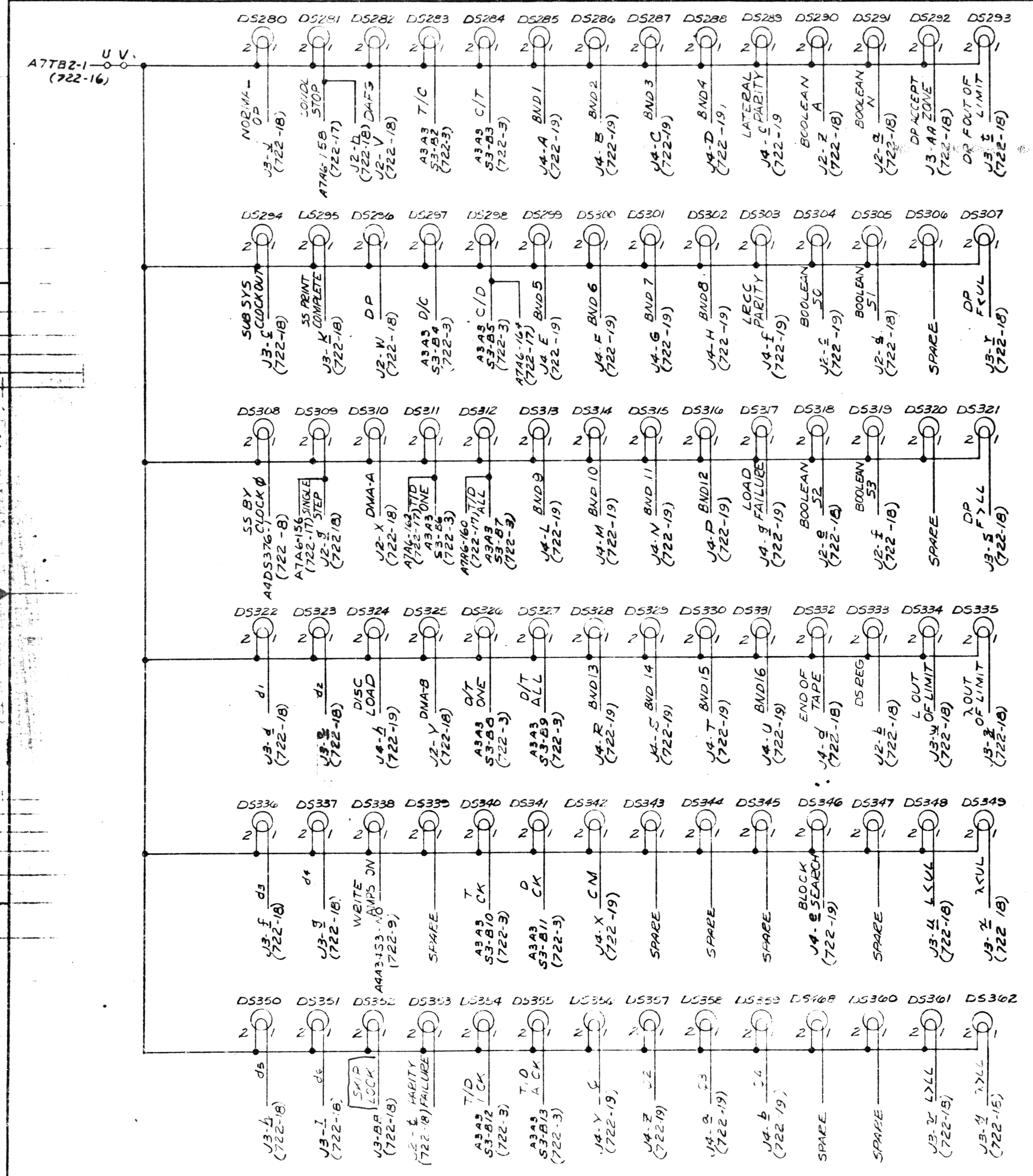

NOTES:

11. THIS SHEET REFERS TO ASSY A4 OF 686722E MAIN INDICATOR AND SWITCH PANEL.

CONTROL PANEL-COMPUTER CONTROL SECTION

686722	A/F 37U-T9 J35
NEXT ASSY	USED ON

UNLESS OTHERWISE SPECIFIED
DIMENSIONS ARE IN INCHES
TOLERANCES ON DIMENSIONS
DECIMAL: ~~2 PLACE ± .03~~ ~~3 PLACE ± .010~~ ~~4 PLACE ± .0005~~
ANGULAR ± —
FRACTIONAL ± —
MATL
FINISH

DRAWING GRADE
DR G. Vanlyne 6-6-66
CHK
ENGR C.J. Hurd
APPD

LINK DIVISION, SIMULATION AND CONTROL GROUP
LINK GENERAL PRECISION, INC
BINGHAMTON, NEW YORK

WIRING DIAGRAM MAIN CONTROL PANEL

CODE IDENT NO. 36378 | SIZE D | DWG NO. 686722E
SCALE NONE | SHEET 7

686722E J

REVISIONS				
SYM	ZONE	DESCRIPTION	DATE	APPROVED
G		ADDED SUBTITLE; ADDED I.D TO DS 382, 383, 375, 376, 364, 365; IN USED ON BLK ADDED J35, A/F 37U-T9 WAS A/F37A-T31 AA	3/15/68	

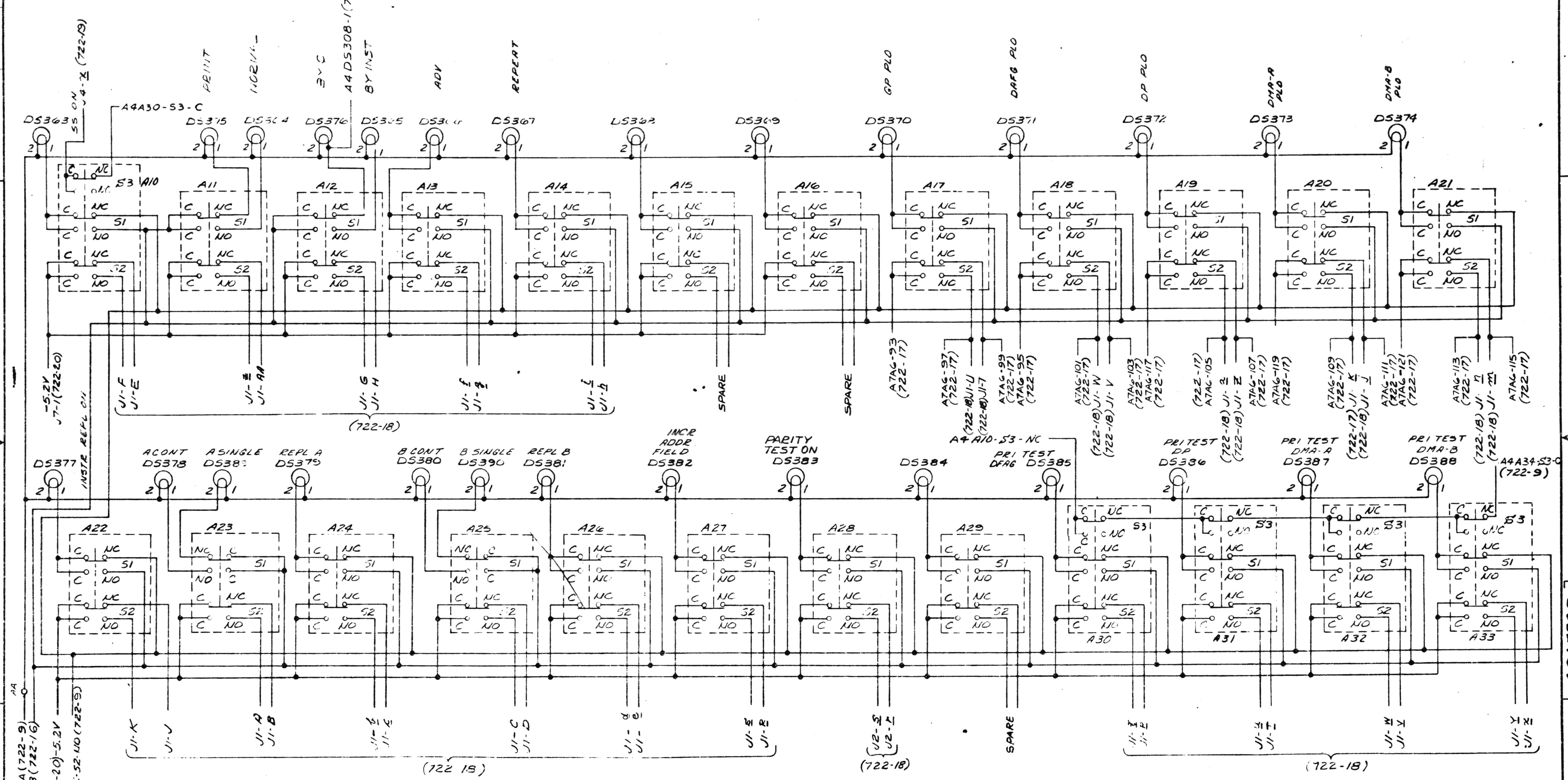

CONTROL PANEL-COMPUTER CONTROL SECTION

NOTE: THIS SHEET REFERS
12. TO ASSEMBLY A4 686722E MAIN INDICATOR AND SWITCH PANELS.

	J35
686722	A/F 37U-T9
NEXT ASSY	USED ON

UNLESS OTHERWISE SPECIFIED
DIMENSIONS ARE IN INCHES
TOLERANCES ON DIMENSIONS
DECIMAL: 2 PLACE ± .03; 3 PLACE ± .010; 4 PLACE ± .0005
ANGULAR: ± —
FRACTIONAL: ± —
MATL
FINISH

DRAWING GRADE
DR [signature]
CHK [signature]
ENGR [signature]
APPD [signature]

LINK — LINK DIVISION, SIMULATION AND CONTROL GROUP — GENERAL PRECISION, INC — BINGHAMTON, NEW YORK

WIRING DIAGRAM MAIN CONTROL PANEL

CODE IDENT NO.	SIZE	DWG NO.
36378	D	686722E

SCALE NONE — SHEET 8

686722E

SYM	ZONE	DESCRIPTION	DATE	APPROVED
G		ADDED ... DS398; ADDED ... ; ... USED ON BLK. ADDED J35, ... WAS A/F 37A-T31 AA	3/15/68	

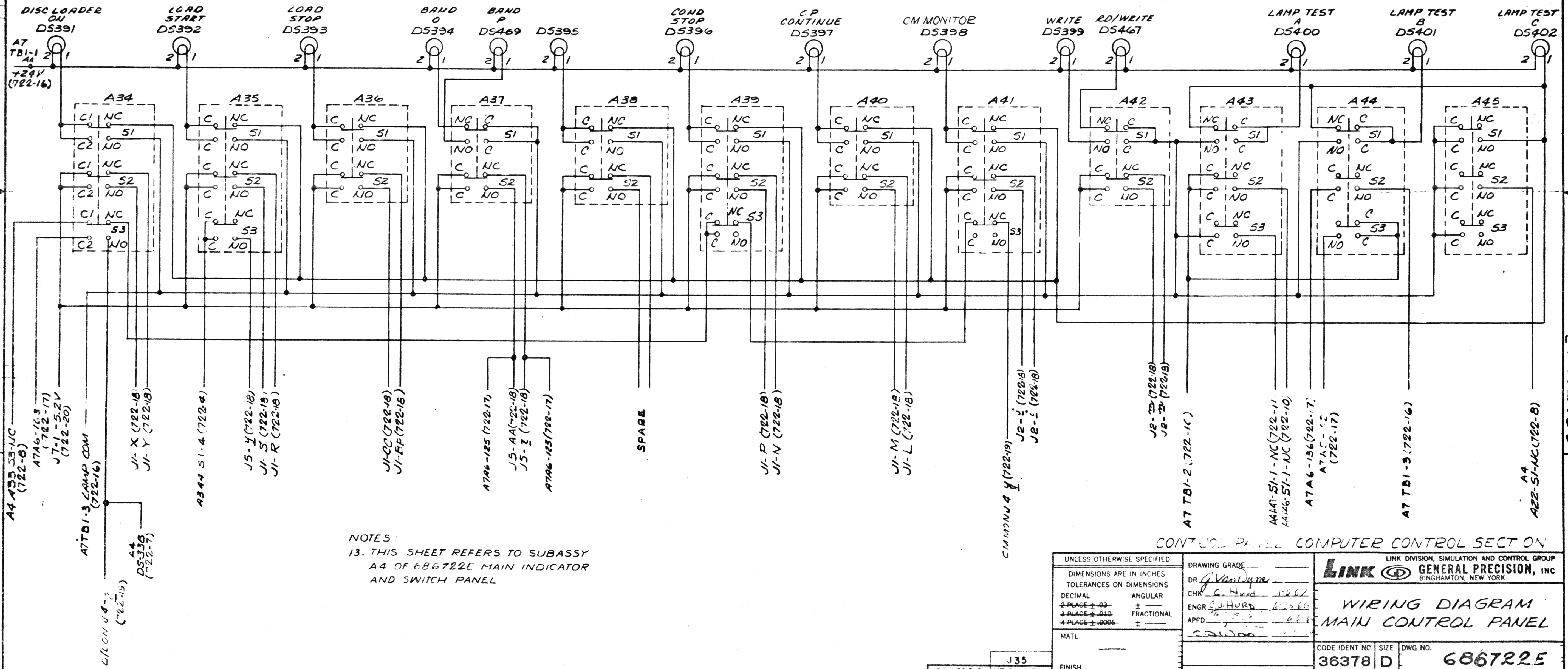

NOTES:

13. THIS SHEET REFERS TO SUBASSY A4 OF 686722E MAIN INDICATOR AND SWITCH PANEL

CONTROL PANEL COMPUTER CONTROL SECTION

NEXT ASSY	USED ON
	J35
686722	A/F 37U-T9

UNLESS OTHERWISE SPECIFIED
DIMENSIONS ARE IN INCHES
TOLERANCES ON DIMENSIONS
DECIMAL ~~2 PLACE ± .03~~ ~~3 PLACE ± .010~~ ~~4 PLACE ± .0005~~
ANGULAR ± —
FRACTIONAL ± —

MATL

FINISH

DRAWING GRADE
DR G. VanDyne
CHK C. Hurd
ENGR C.J. HURD
APPD

LINK DIVISION, SIMULATION AND CONTROL GROUP
LINK GENERAL PRECISION, INC
BINGHAMTON, NEW YORK

WIRING DIAGRAM MAIN CONTROL PANEL

CODE IDENT NO.	SIZE	DWG NO.
36378	D	686722E

SCALE NONE SHEET 9

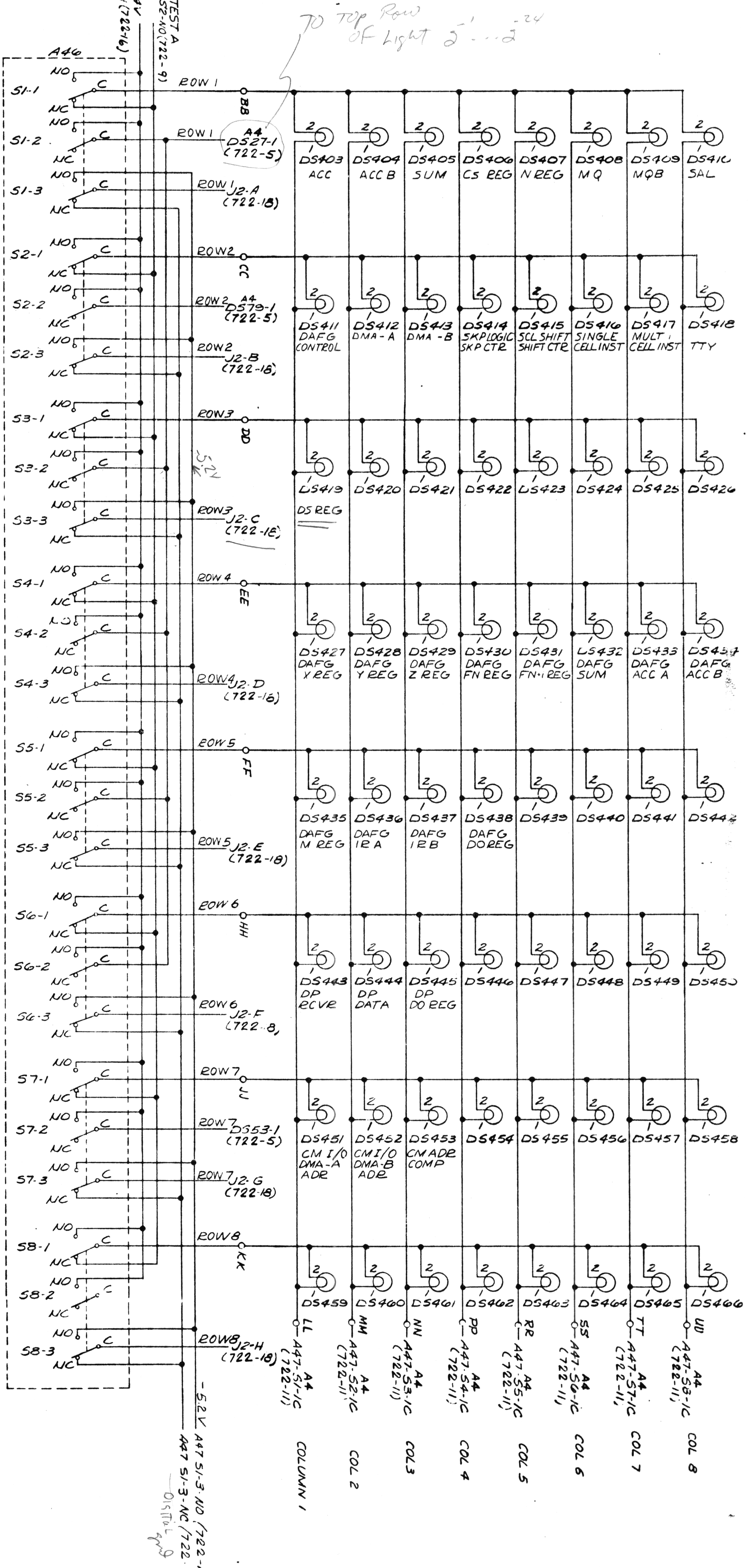

NOTES:
1. THIS SHEET REFERS TO SUBASSY A4 OF 686722E MAIN INDICATOR AND SWITCH PANEL.

REVISIONS				
SYM	ZONE	DESCRIPTION	DATE	APPROVED
G		ADDED SUBTITLE; ADDED GENERAL NOTE; ... ON BLK; ADDED J35; A/F 37U-T9 WAS A/F 37A-T31 AA	3/15/68	

NEXT ASSY	USED ON
686722	AF 37U-T9
	J35

UNLESS OTHERWISE SPECIFIED DIMENSIONS ARE IN INCHES TOLERANCES ON DIMENSIONS DECIMAL ANGULAR ± FRACTIONAL ±

MAT'L

FINISH

CONTROL PANEL MATRIX SELECTOR SECTION

DRAWING GRADE
DR
CHK
ENGR
APPD

LINK DIVISION SIMULATION AND CONTROL GROUP
GENERAL PRECISION, INC
BINGHAMTON, NEW YORK

WIRING DIAGRAM
MAIN CONTROL PANEL

CODE IDENT NO.	SIZE	DWG NO.
36378	D	686722E

SCALE NONE | SHEET 10

686722E

REVISIONS				
SYM	ZONE	DESCRIPTION	DATE	APPROVED
C		ADDED COLUMN CUTOUTS 1 THRU 8 WITH IDENT.; IN USED ON BLK ADDED J35, A/F 37U-T9 WAS A/F 37A-T31	3/15/68	

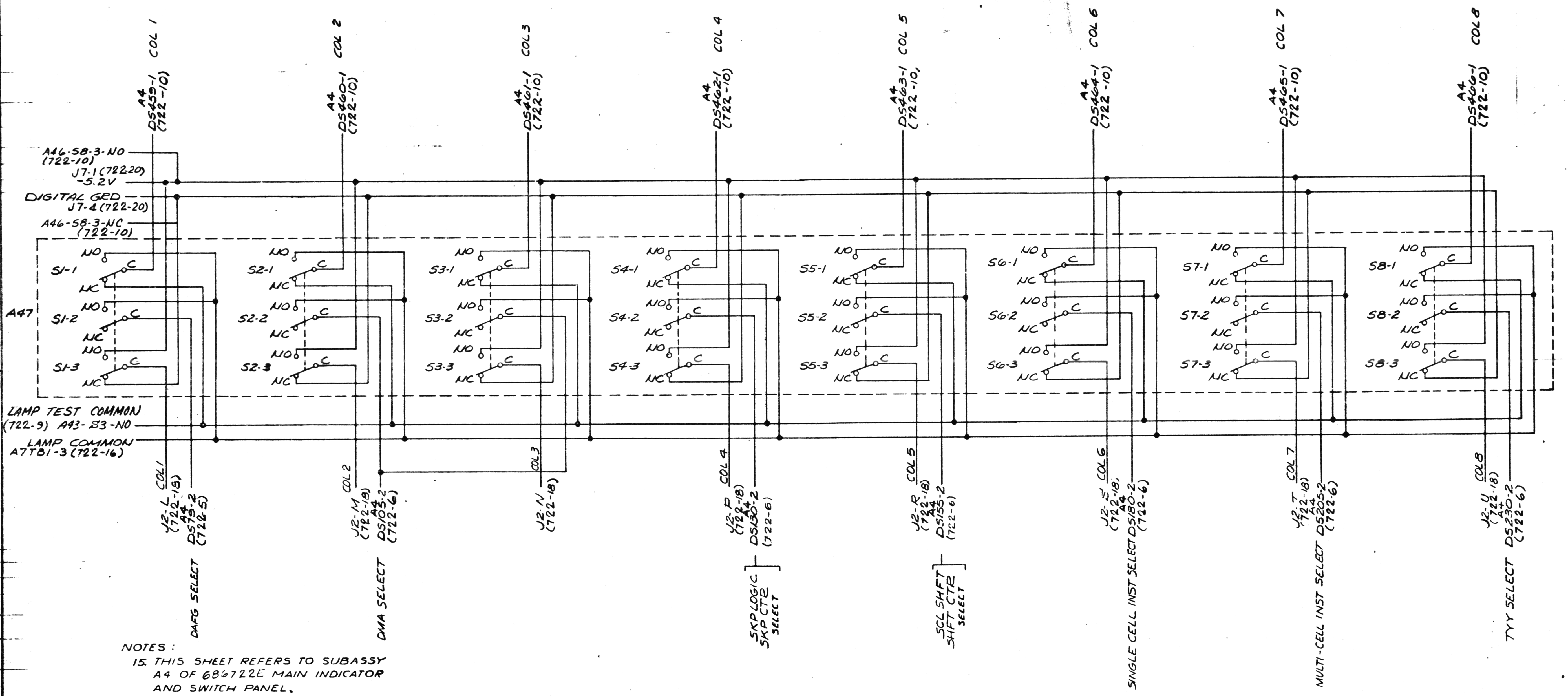

NOTES:

15. THIS SHEET REFERS TO SUBASSY A4 OF 686722E MAIN INDICATOR AND SWITCH PANEL.

	J35
686722	A/F 37U-T9
NEXT ASSY	USED ON

UNLESS OTHERWISE SPECIFIED
DIMENSIONS ARE IN INCHES
TOLERANCES ON DIMENSIONS
DECIMAL: ~~2 PLACE ± .03~~ ~~3 PLACE ± .010~~ ~~4 PLACE ± .0005~~
ANGULAR ± —
FRACTIONAL ± —
MATL
FINISH

DRAWING GRADE
DR G. Van Dyne [illegible]
CHK [illegible]
ENGR [illegible]
APPD [illegible]

LINK DIVISION, SIMULATION AND CONTROL GROUP
LINK GENERAL PRECISION, INC
BINGHAMTON, NEW YORK

WIRING DIAGRAM
MAIN CONTROL PANEL

CODE IDENT NO. 36378 | SIZE D | DWG NO. 686722E

SCALE NONE | SHEET 11

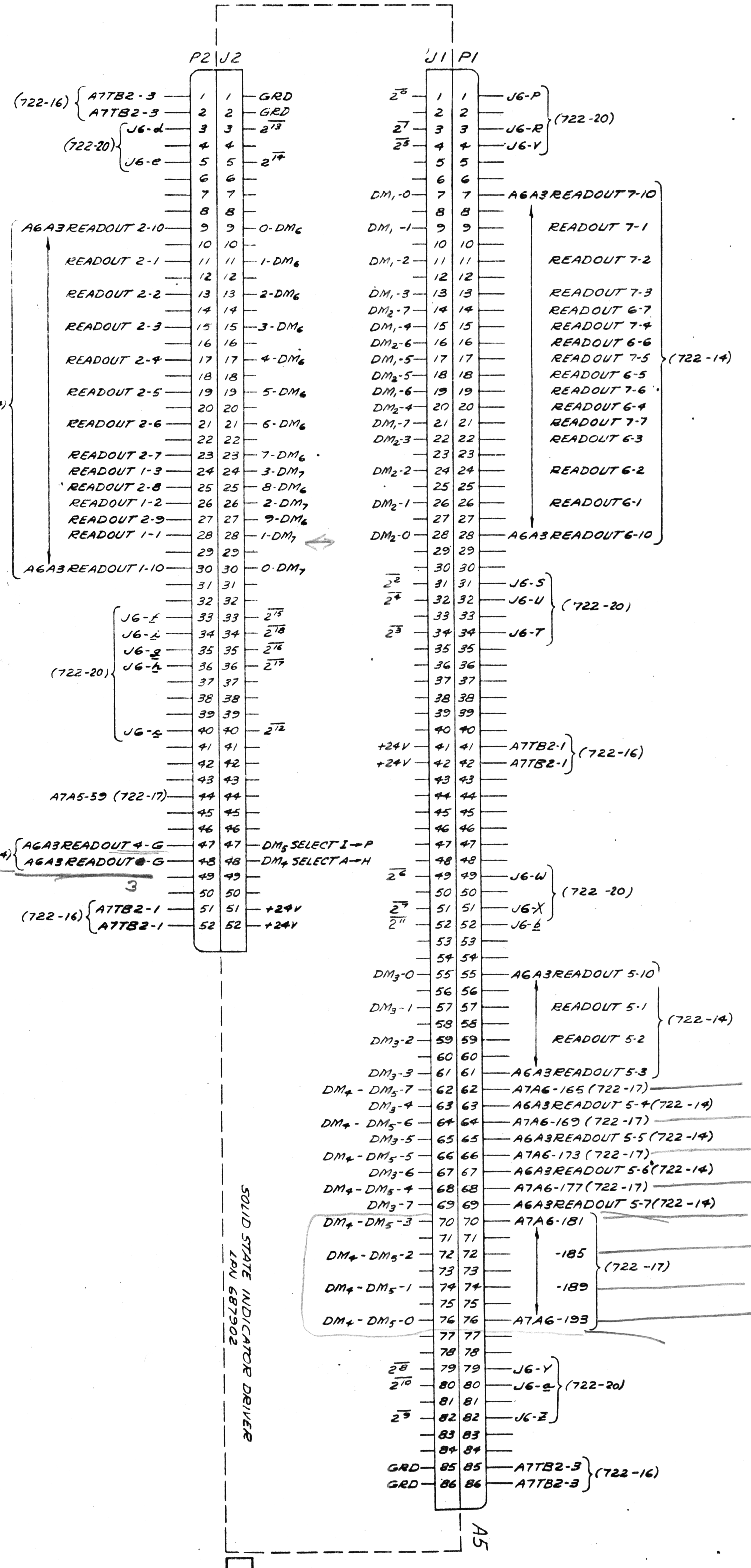

NOTES:
16. THIS SHEET REFERS TO SUBASSY A5 OF 686722E
17. KEYBOARD DECODE PANEL

REVISIONS

ZONE	LTR	DESCRIPTION	DATE	APPROVED
	F	REPLACES REV E: REDRAWN WITH CHANGE		
AC	G	2^8 WAS 2^4; IN USED ON BLK ADDED J35, A/F 37U-T9 WAS A/F 37A-T31		

NEXT ASSY	USED ON
503730	A/F 37U-T9 J35

UNLESS OTHERWISE SPECIFIED DIMENSIONS ARE IN INCHES TOLERANCES ON DIMENSIONS DECIMAL 2 PLACE ± 3 PLACE ± HOLE DIA. TOL. PER SHOP STDS. MFR TO LINK STDS.

MAT'L

FINISH

DR / DR CHK / DESIGN CHK / MFG. CHK / PROJ. APPD

LINK GROUP SYSTEMS DIVISION GENERAL PRECISION, INC. BINGHAMTON, NEW YORK

WIRING DIAGRAM—MAIN CONTROL PANEL

SIZE	CODE IDENT NO.	DWG. NO.
D	36378	686722E

SCALE NONE SHEET 12

686722E J

SYM	ZONE	DESCRIPTION	DATE	APPROVED
E		S1-M WAS A7A6-21(722-17) RA4 S1-X WAS A7A5-43(722-17)	9/20/67	WEP
F		GENERAL CHANGE	5/5/67	
G		ADDED SUBTITLE; IN USED ON BLK, ADDED J35, A/F 37U T9 WAS A/F 37A T31	3/18/68	

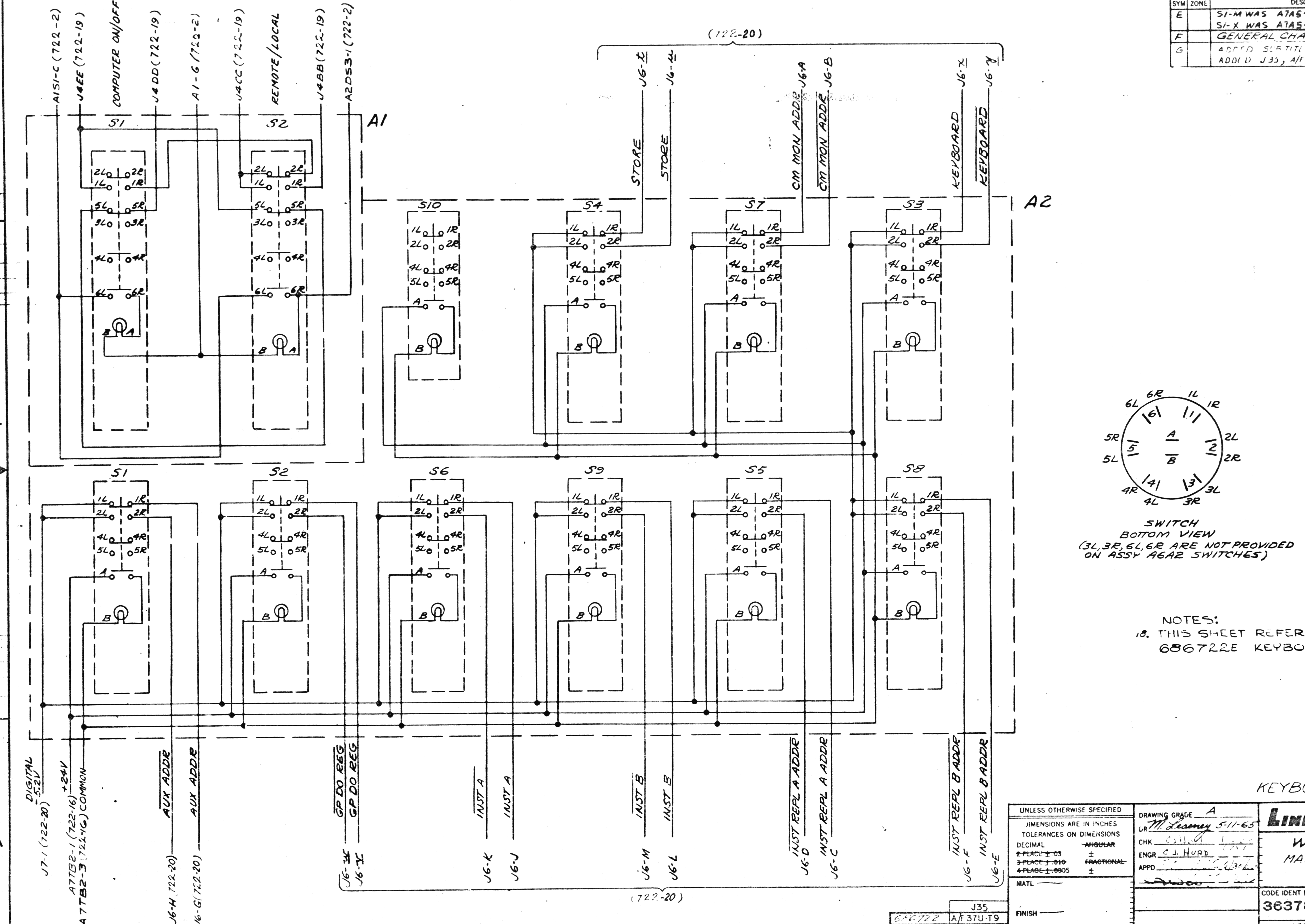

NOTES:
18. THIS SHEET REFER TO ASSY A6 OF 686722E KEYBOARD PANEL.

686722E

J

KEYBOARD CONTROL

J35	
686722	A/F 37U-T9
NEXT ASSY	USED ON

UNLESS OTHERWISE SPECIFIED
DIMENSIONS ARE IN INCHES
TOLERANCES ON DIMENSIONS
DECIMAL — ANGULAR ±
2 PLACE ± .03
3 PLACE ± .010 — FRACTIONAL ±
4 PLACE ± .0005
MATL
FINISH

DRAWING GRADE A
DR M. Leseney 5-11-65
CHK
ENGR C. J. HURD
APPD

LINK DIVISION, SIMULATION AND CONTROL GROUP
LINK GENERAL PRECISION, INC
BINGHAMTON, NEW YORK

WIRING DIAGRAM—
MAIN CONTROL PANEL

CODE IDENT NO.	SIZE	DWG NO.
36378	D	686722E

SCALE NONE — SHEET 13

SYM	ZONE	REVISIONS DESCRIPTION	DATE	APPROVED
C		A7A6-166 WAS TO RE23-10, A7A6-168 WAS TO RE4-13	10/11/66	WFP
E		READOUT 1-G WAS A7A5-11(722-17); RAJ READOUT 5-G WAS A7A5-13(722-17); READOUT 7-G WAS A7A5-56(722-17)	4/27/67	WFP
F		CHANGED CALLOUTS TO SHT 12	4/7/67	
G		ADDED SUBTITLE; IN USED ON BLK. ADDED J35, A/F 37U-T9 WAS A/F 37A-T31	3/18/68	

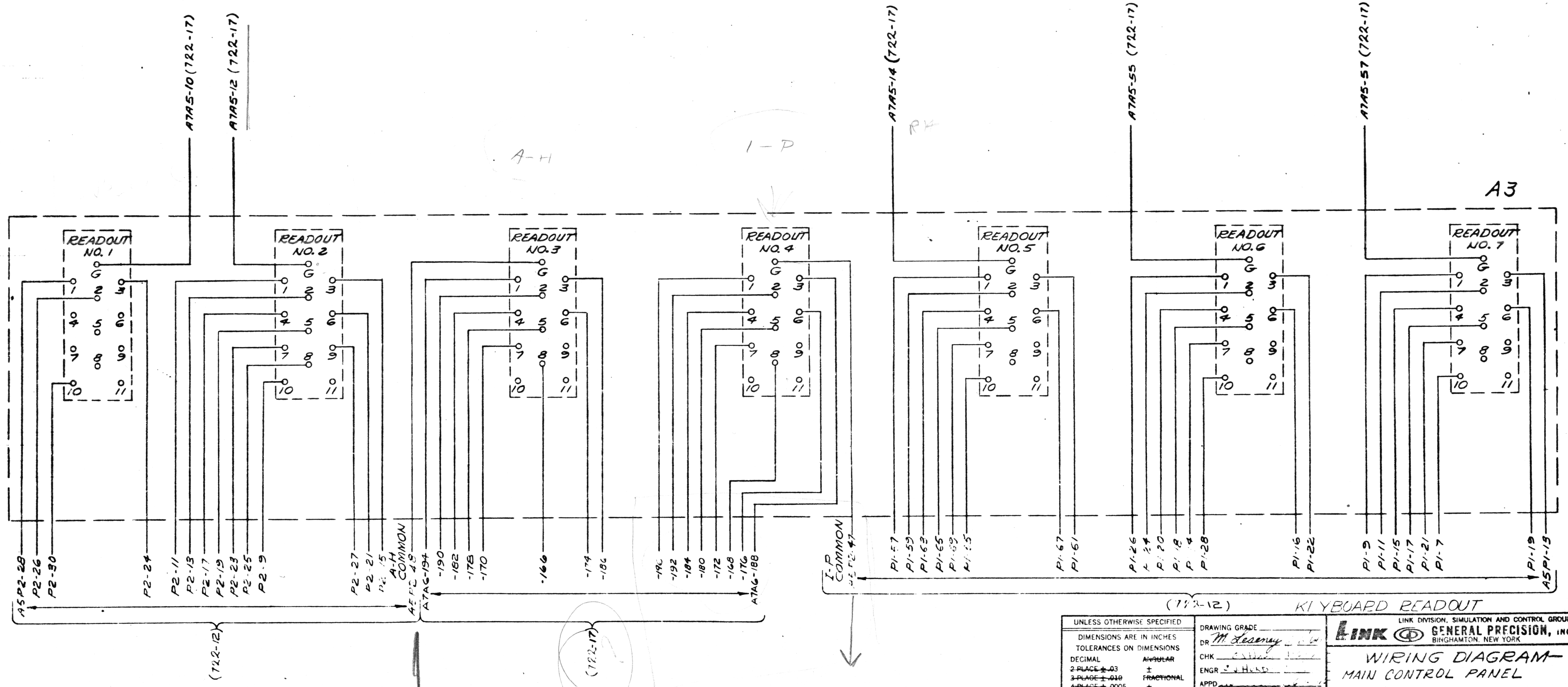

NOTES:
15. THIS SHEET REFERS TO SUBASSY A6 OF 686722E THE KEYBOARD PANEL.

NEXT ASSY	USED ON
686722	J35 A/F 37U-T9

UNLESS OTHERWISE SPECIFIED
DIMENSIONS ARE IN INCHES
TOLERANCES ON DIMENSIONS
DECIMAL 2 PLACE ± .03, 3 PLACE ± .010, 4 PLACE ± .0005
ANGULAR ±
FRACTIONAL ±
MATL —
FINISH —

DRAWING GRADE
DR M. Leseney
CHK
ENGR
APPD

LINK DIVISION, SIMULATION AND CONTROL GROUP
LINK GENERAL PRECISION, INC
BINGHAMTON, NEW YORK

WIRING DIAGRAM—
MAIN CONTROL PANEL

CODE IDENT NO.	SIZE	DWG NO.
36378	D	6867225

SCALE NONE
SHEET 14

686722E

REVISIONS				
ZONE	LTR	DESCRIPTION	DATE	APPROVED
C		IN USED ON BLL ADDED J35, A/F 37U-T9 WAS A/F 37A-T31 AA	3/18/68	Hy

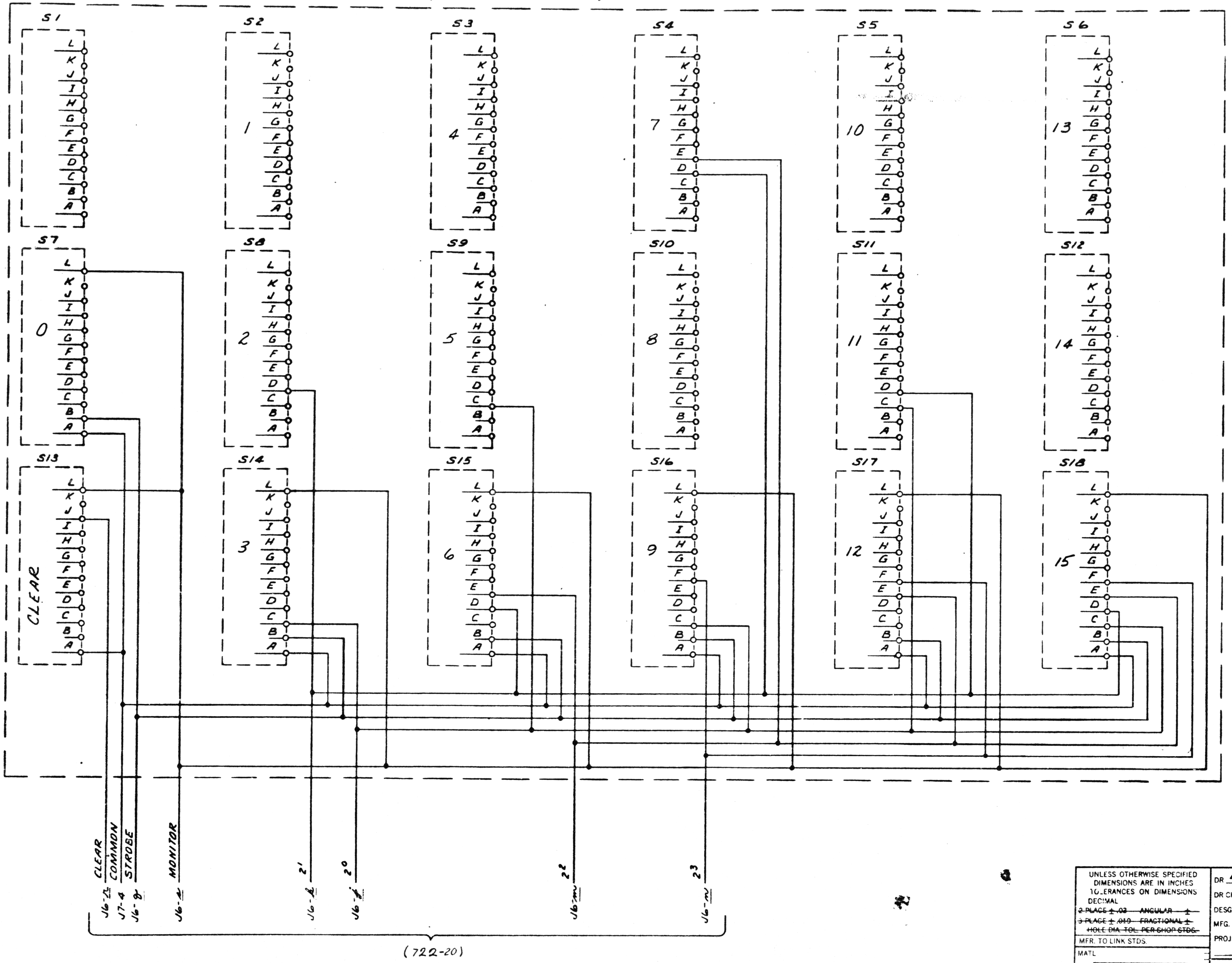

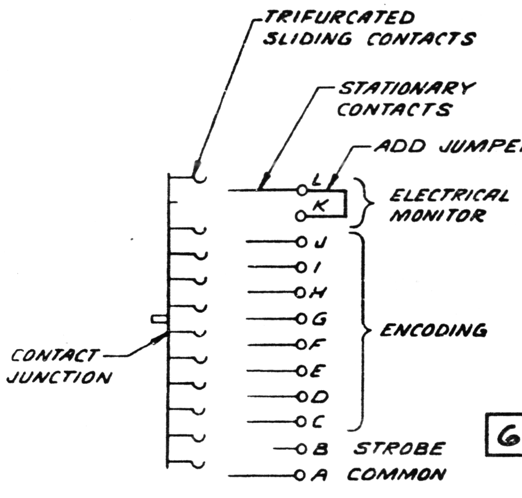

SWITCH DETAIL

NOTES:

20. THIS SHEET REFERS TO ASSY A6 OF 686722 E KEYBOARD PANEL.

686722E

J

686722	A/F 37U-T9 (J35)
NEXT ASSY	USED ON

UNLESS OTHERWISE SPECIFIED DIMENSIONS ARE IN INCHES TOLERANCES ON DIMENSIONS DECIMAL ~~2 PLACE ± .03 ANGULAR ± 3 PLACE ± .010 FRACTIONAL ± HOLE DIA. TOL. PER SHOP STDS.~~

MFR. TO LINK STDS.

MATL

FINISH

DR D. BREWER

DR CHK

DESGN CHK C.J. HURD

MFG. CHK

PROJ. APPD

LINK GENERAL PRECISION, INC. LINK GROUP, SYSTEMS DIVISION BINGHAMTON, NEW YORK

WIRING DIAGRAM-MAIN CONTROL PANEL

SIZE	CODE IDENT NO.	DWG NO.
D	36378	686722E

SCALE NONE SHEET 15

REVISIONS				
SYM	ZONE	DESCRIPTION	DATE	APPROVED
C		ON J101, A16, TB1-1 WAS TB3-1; J102, A16, TB1-2 WAS TB3-2; ON TB2-1, 722-7 WAS 722-2; ADDED A7A5-59 TO TB1-4 LRK	7/12/66	W.E.P.
E		J101-A3 WAS A7A5-37, TB1-3 WAS A7A5-18(722-17) TB1-4 WAS A7A5-59(722-17) RAJ	4/27/67	W.E.P.
F		ADDED CALLOUTS TO SHT 12 AT TB2, DELETED A6A2S1-6 CALLOUT FROM TB2-4	6/5/67	
G		ADDED LINE FUNCTIONS; IN USED ON BLK, ADDED J35, A/F 37U-T9 WAS A/F 37A-T31	9/18/68	
J		ADDED C1 & C2 TO TB-1 & TB-2		

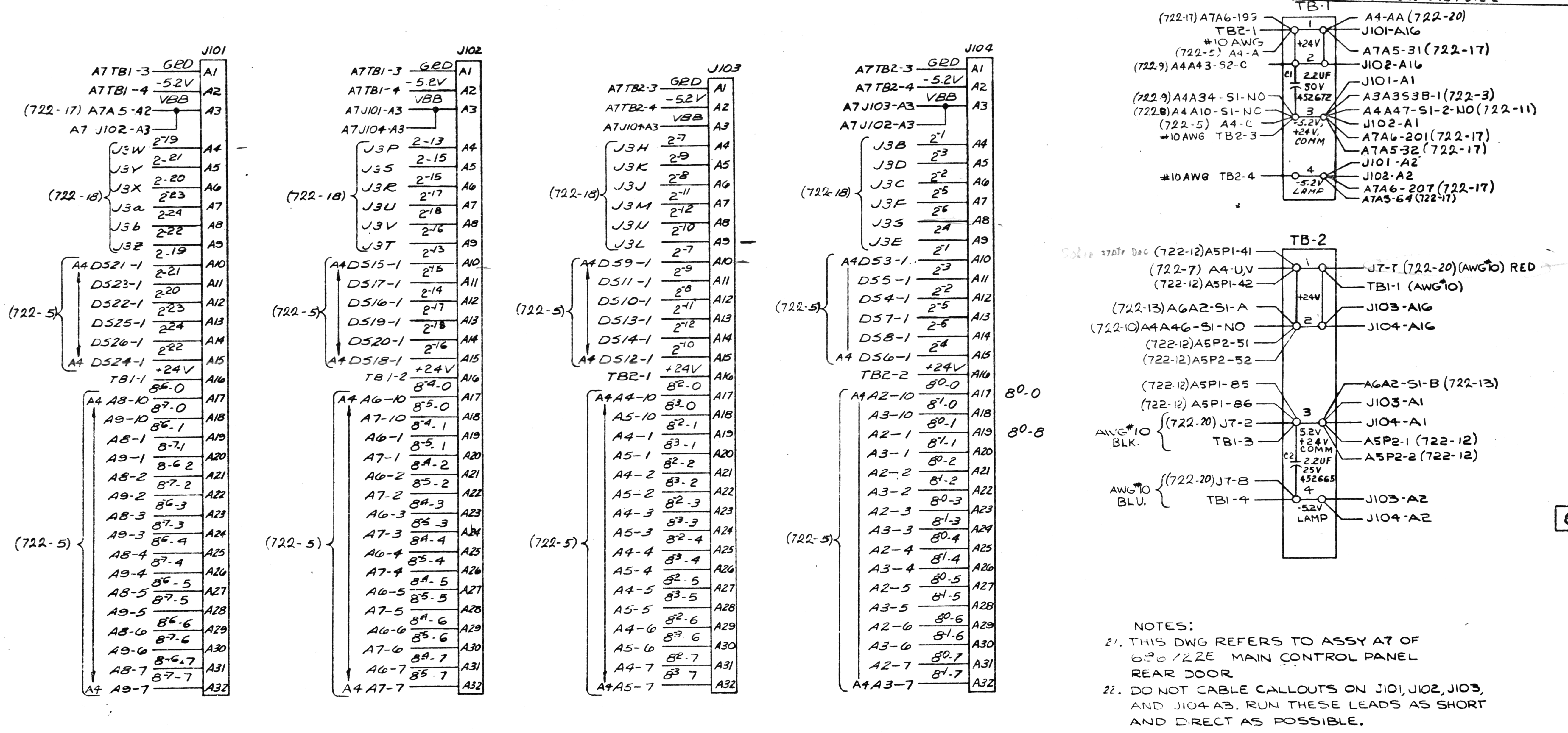

NOTES:
21. THIS DWG REFERS TO ASSY A7 OF 686722E MAIN CONTROL PANEL REAR DOOR
22. DO NOT CABLE CALLOUTS ON J101, J102, J103, AND J104 A3. RUN THESE LEADS AS SHORT AND DIRECT AS POSSIBLE.

(NOTES CONT'D)
23. WHEN WIRING TB2 USE TERMINAL LUG LPN 289394 TWISTING 3 WIRES TOGETHER & CRIMPING IN CALLED OUT LUG. THIS DOES NOT APPLY TO AWG#10 WIRE WHICH MUST USE TERMINAL LUG LPN 289401 AND MUST BE TRIMMED TO FIT TERMINAL STRIP

J35	
686722	A/F 37U-T9
NEXT ASSY	USED ON

UNLESS OTHERWISE SPECIFIED
DIMENSIONS ARE IN INCHES
TOLERANCES ON DIMENSIONS
DECIMAL ±.03 / ANGULAR ± — / FRACTIONAL ± —
MATL
FINISH

DRAWING GRADE
DR G. VanWyne
CHK
ENGR C. J. HURD
APPD

LINK DIVISION, SIMULATION AND CONTROL GROUP
LINK GENERAL PRECISION, INC
BINGHAMTON, NEW YORK

WIRING DIAGRAM MAIN CONTROL PANEL

CODE IDENT NO.	SIZE	DWG NO.
36378	D	686722E

SCALE NONE — SHEET 16

ZONE	LTR	DESCRIPTION	DATE	APPROVED
	B	CR1 & CR4 WERE IN3808; CR10(149) WAS TO A4DS205-2(722-6)	8/24/66	CEL
4430 4458	C	CHANGED CALLOUTS ON TERMINALS 165, 166, 168, 169 173 177 181 185, 189 & 193 688418 ASSY WAS 508418; 688361 WAS 508361	9/21/66	W.E.P.
	E	GENERAL CHANGES	[illegible]	W.E.P.
	F	GENERAL CHANGES	9/5/67	R.L.A.
	G	ADDED LINE FUNCTIONS. ADDED GRD TO 688361 ASSY, ZONE 8A; IN USED ON BLK, ADDED J35, A/F 37U-T9 WAS A/F 37A-T31	3/10/68	[illegible]
	H	ADDED B TO 688361 ASSY AT A7A5; AND 688418. DELETED R16 AND R19 AT A7A5	[illegible]	[illegible]

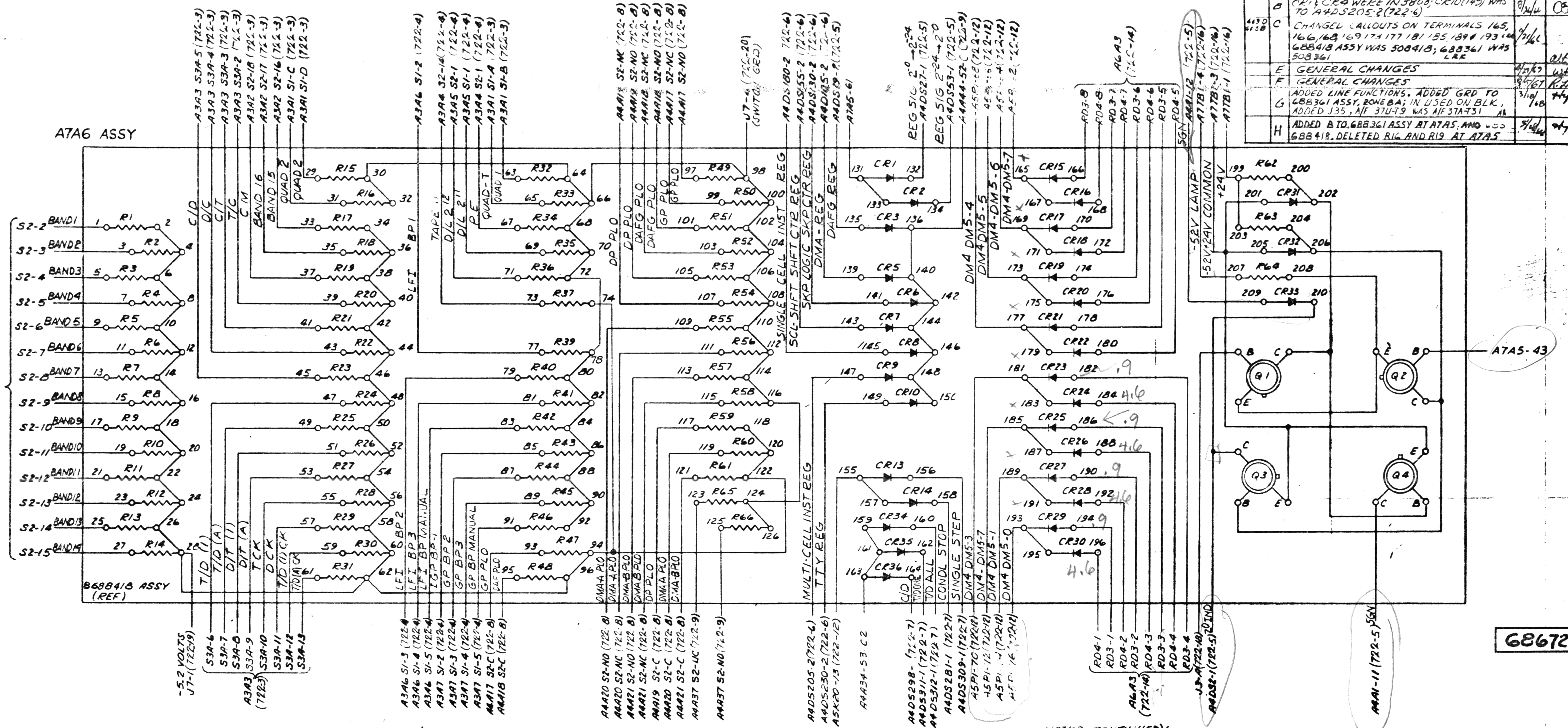

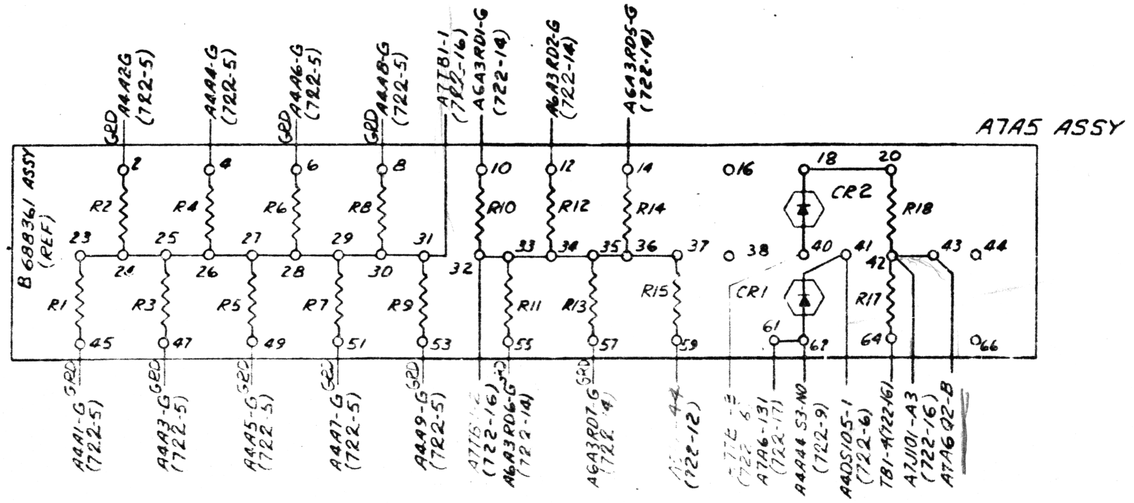

NOTES: UNLESS OTHERWISE SPECIFIED

A7A6

24. THIS SHEET REFERS TO A7 ASSY OF 686722 CONTROL PANEL REAR DOOR
25. RESISTORS R1 THRU [illegible] R66 ARE .2K, 1/4W [illegible]
26. RESISTORS [illegible] THRU R46 ARE 510 Ω, 1/4W, ±5% LPN 452042
27. RESISTORS R47 THRU R61 ARE 430 Ω, 1/4W, ±5% [illegible]
28. RESISTORS R62 [illegible] ARE 3.3K, 1/4W, [illegible] LPN 452061
29. [illegible] R64 IS 220 [illegible] 1/4W, ±5%, LPN 452033
30. DIODES CR1, CR2 [illegible] THRU CR10 & CR13 THRU CR30, CR35, CR34 THRU CR36 ARE AIR 12, LPN 540505
31. DIODES CR31 & CR32 ARE [illegible]
32. TRANSISTORS Q1-Q4 ARE 2N1711, LPN 503950

NOTES (CONTINUED):

A7A5

33. WIRE LEADS FROM A7A5-42 AND 43 AS SHORT AND DIRECT AS APPLICABLE
34. RESISTORS R1 THRU R9 ARE 100 Ω, 1/4W, ±5%, LPN 249090
35. RESISTORS R10 THRU R15 ARE 140 Ω, 1/4W, ±5%, LPN 249093
36. RESISTORS R16 AND R19 ARE 150 Ω, 5W, ±5% LPN 456881
37. RESISTOR R17 IS 10 Ω, 1/4W, ±5%, LPN 249070
38. RESISTOR R18 IS 1 Ω, 1/4W, ±5%, LPN 249050
39. DIODES CR1 AND CR2 ARE IN3208, LPN 546910

NEXT ASSY	USED ON
	J35
686722	A F37U T9

UNLESS OTHERWISE SPECIFIED DIMENSIONS ARE IN INCHES TOLERANCES ON DIMENSIONS DECIMAL
~~2 PLACE ± .03 ANGULAR ±~~
~~3 PLACE ± .010 FRACTIONAL ±~~
~~HOLE DIA. TOL. PER SHOP STDS.~~
MFR. TO LINK STDS.
MATL
FINISH

DR D. BREWER 6-6-66
DR CHK C. J. Hurd
DESGN CHK C. J. Hurd
MFG. CHK
PROJ. APPD [illegible]

LINK GENERAL PRECISION, INC.
LINK GROUP, SYSTEMS DIVISION
BINGHAMTON, NEW YORK

WIRING DIAGRAM-
MAIN CONTROL PANEL

SIZE	CODE IDENT NO.	DWG NO.
D	36378	686722E

SCALE NONE | SHEET 17

686722E

FORM NO. F 1474-65

ZONE	LTR	DESCRIPTION	DATE	APPROVED
	G	REVISED & REDRAWN, ADDED FUNCTION. SHEET 18 & 19 WAS SH 18		

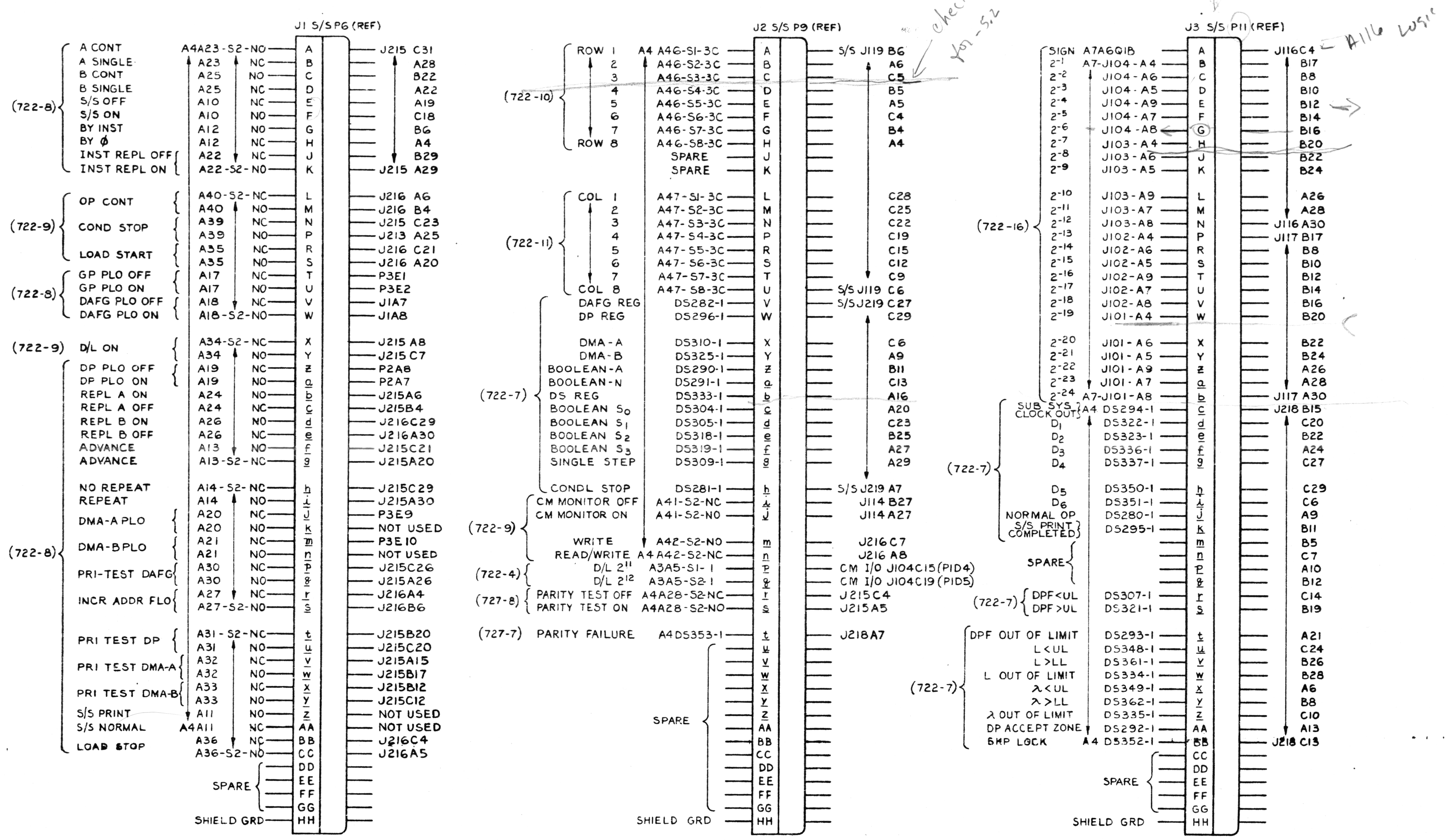

NEXT ASSY	USED ON
686722	J35 A/F37U-19

UNLESS OTHERWISE SPECIFIED DIMENSIONS ARE IN INCHES TOLERANCES ON DIMENSIONS DECIMAL ~~2 PLACE ± .03 ANGULAR ±~~ ~~3 PLACE ± .010 FRACTIONAL ±~~ HOLE DIA TOL PER SHOP STDS. MFR. TO LINK STDS.

MATL

FINISH

DR 3-22-68 · DR CHK 3/21/68 · DESGN CHK · MFG. CHK · PROJ. APPD

LINK GENERAL PRECISION, INC. LINK GROUP, SYSTEMS DIVISION BINGHAMTON, NEW YORK

WIRING DIAGRAM MAIN CONTROL PANEL

SIZE	CODE IDENT NO.	DWG. NO.
D	36378	686722E

SCALE · SHEET 18

686722E J